REV	DESCRIPTION	DRAWN	DATE
		APPROVED	DATE

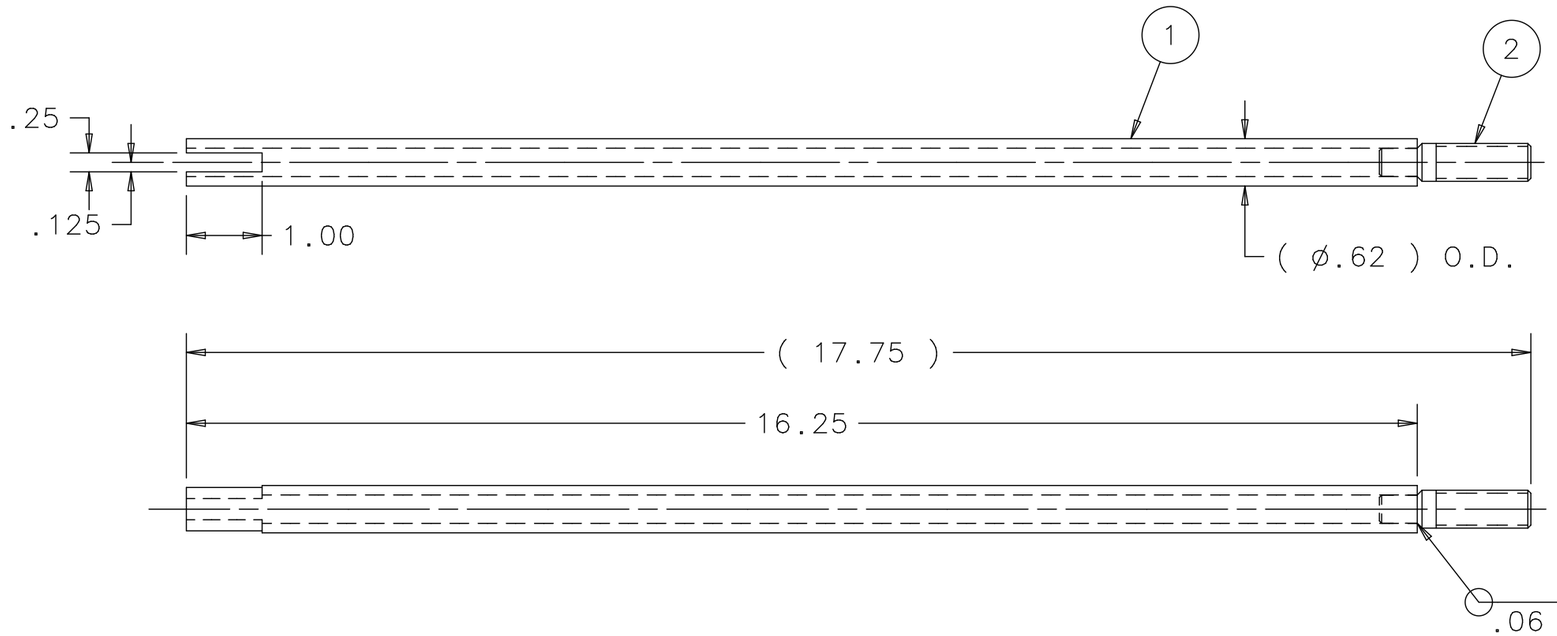

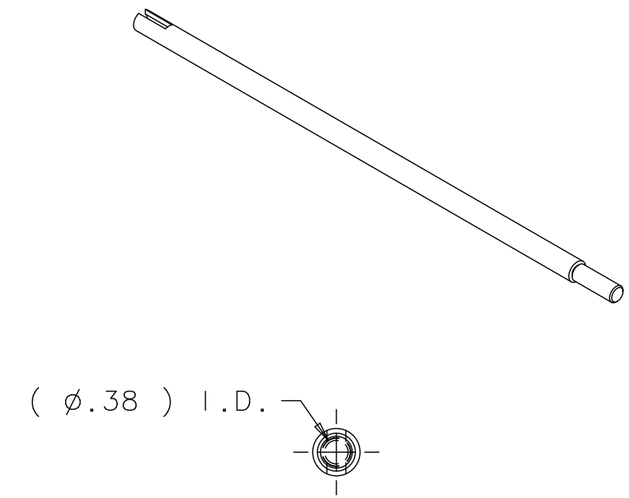

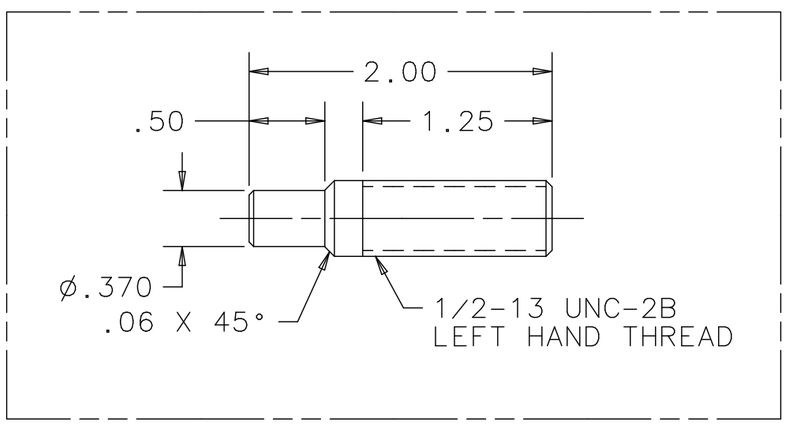

ITEM 2
SCALE: 1:1

NOTES: 1. ALL WELDS TO BE PERFORMED BY FERMILAB.

2. USE WELDING ROD ER4043 FOR ALL WELDS.

ITEM	PART NO.	DESCRIPTION OR SIZE	QTY.
2		6061-T651 ALUMINUM ROUND	
1		6061-T6 ALUMINUM ROUND TUBING 5/8" O.D. X 3/8" I.D.	

PARTS LIST

UNLESS OTHERWISE SPECIFIED					
.XX	.XXX	ANGLES	ORIGINATOR	M.MCGEE	28-OCT-2011
± .02	± .005	± .5°	DRAWN	R.STEWART	28-OCT-2011
			CHECKED	D.SCHMITT	06-JAN-2012
			APPROVED	M.MCGEE	06-JAN-2012

1. BREAK ALL SHARP EDGES .015 MAX.
2. DO NOT SCALE DRAWING.
3. DIMENSIONS BASED UPON ASME Y14.5M-1994
4. MAX. ALL MACH. SURFACES 63
5. DRAWING UNITS: U.S. INCH

USED ON: MC-433835

MATERIAL: SEE PARTS LIST ABOVE

FERMI NATIONAL ACCELERATOR LABORATORY
UNITED STATES DEPARTMENT OF ENERGY

NOVA-ANU TARGET HALL
MEDIUM ENERGY TARGET
TENSION SYSTEM BAR

SCALE	DRAWING NUMBER	SHEET	REV
1:2	8875.112-MB-433842	1 OF 1	

CREATED WITH : Ideas12NXSeries | GROUP: ACCELERATOR MECH. SUPPT.

Created: 13:57:43 on 21-02-13 (D-M-Y) By: rstewart State: 3-RELEASED