REV	DESCRIPTION	DRAWN	DATE
		APPROVED	DATE

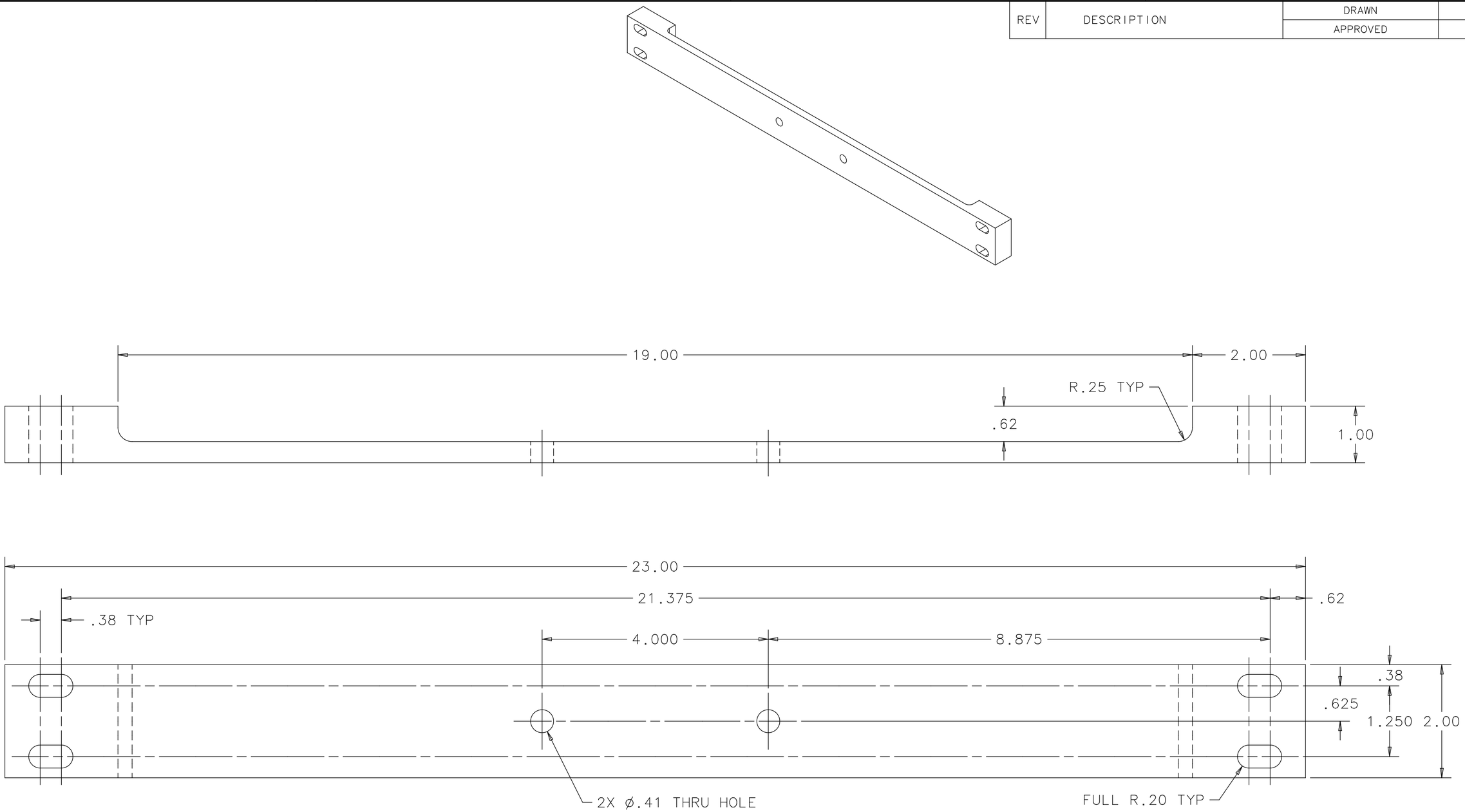

UNLESS OTHERWISE SPECIFIED			ORIGINATOR	M.MCGEE	18-OCT-2011
.XX	.XXX	ANGLES	DRAWN	R.STEWART	18-OCT-2011
± .01	± .005	± .5°	CHECKED	D.SCHMITT	06-JAN-2012
			APPROVED	M.MCGEE	06-JAN-2012

1. BREAK ALL SHARP EDGES .015 MAX.
2. DO NOT SCALE DRAWING.
3. DIMENSIONS BASED UPON ASME Y14.5M-1994
4. MAX. ALL MACH. SURFACES 63
5. DRAWING UNITS: U.S. INCH

USED ON: ME-433836

MATERIAL: 6061-T6 ALUMINUM

FERMI NATIONAL ACCELERATOR LABORATORY
UNITED STATES DEPARTMENT OF ENERGY

NOVA-ANU TARGET HALL MEDIUM ENERGY TARGET TENSION SYSTEM CROSSBAR

SCALE	DRAWING NUMBER	SHEET	REV
3:4	8875.112-MC-433838	1 OF 1	

CREATED WITH : Ideas12NXSeries | GROUP: ACCELERATOR MECH. SUPPT.

Created: 13:56:27 on 21-02-13 (D-M-Y) By: rstewart State: 3-RELEASED