REV	DESCRIPTION	DRAWN / APPROVED	DATE / DATE
A	ø1.00 COUNTERBORE WAS ø.78, VIEW ADDED, AND 2X COUNTERBORE ON OD REMOVED	R.STEWART	30-JAN-2012
		M.MCGEE	31-JAN-2012
B	MISSING DIMENSION ADDED	R.STEWART	08-JUN-2012
		M.MCGEE	08-JUN-2012

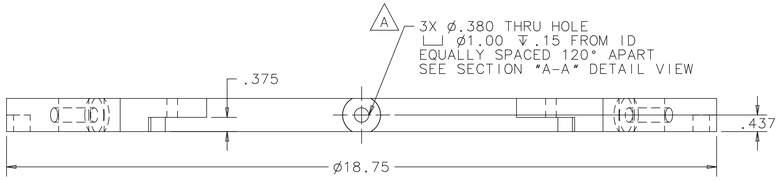

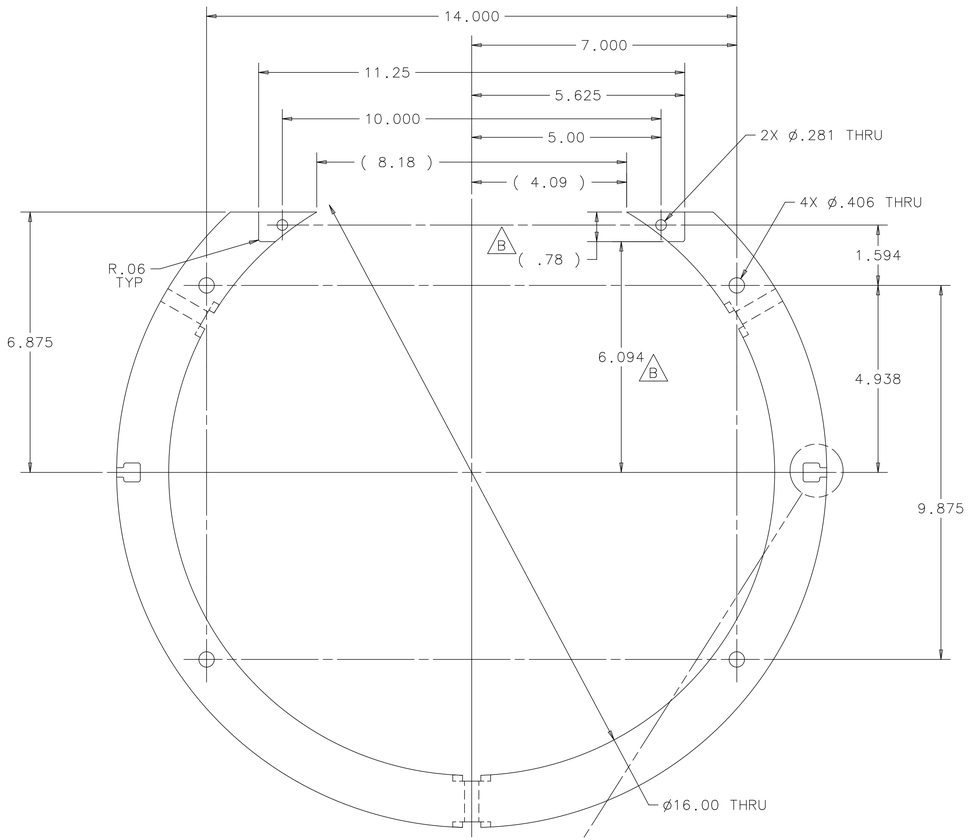

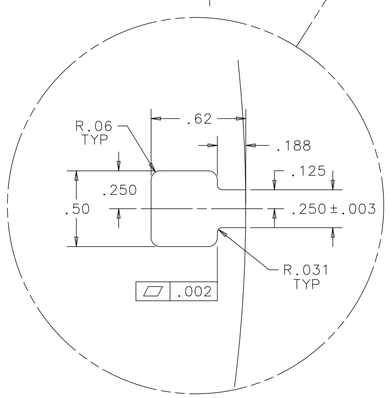

SCALE 2:1

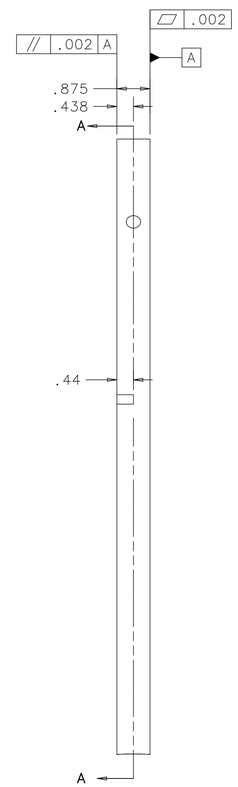

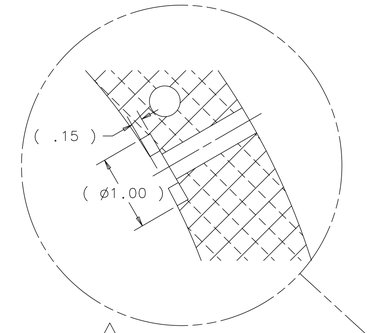

SCALE 1:1
DETAIL TYP 2X

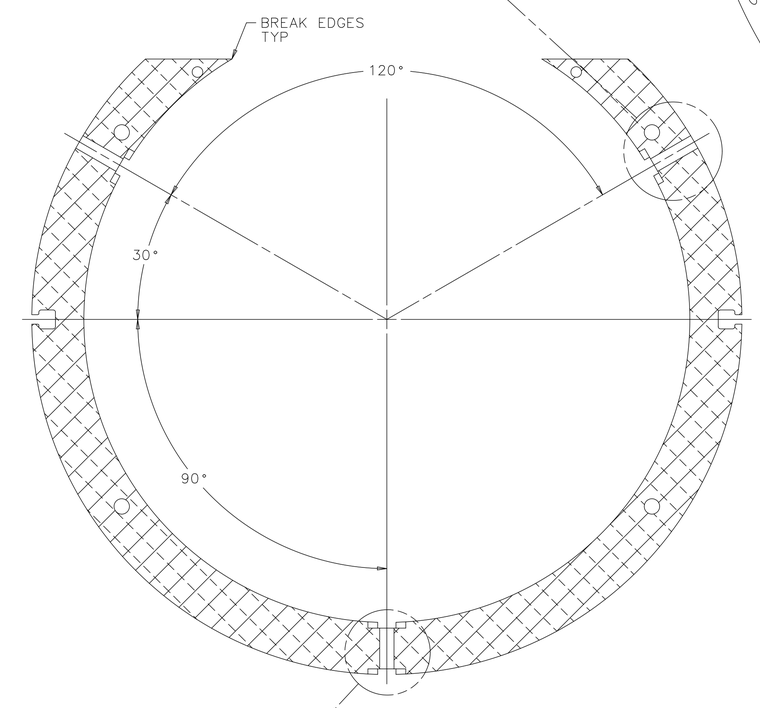

SECTION A-A
SCALE 1:2

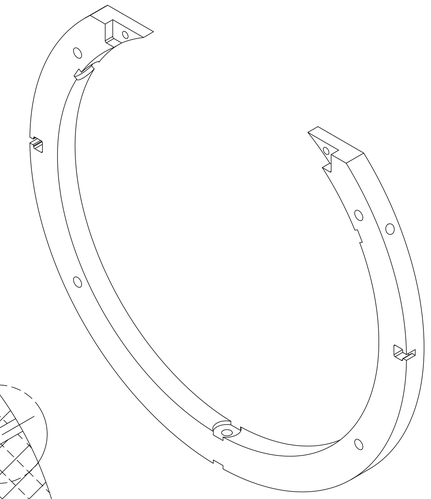

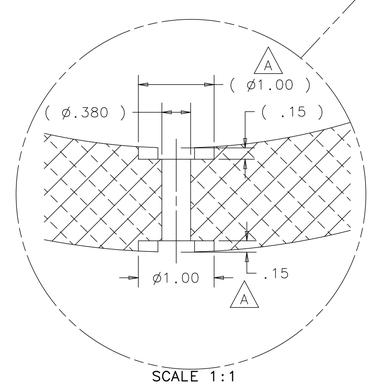

SCALE 1:1

UNLESS OTHERWISE SPECIFIED			ORIGINATOR	M.MCGEE	16-SEP-2011
.XX	.XXX	ANGLES	DRAWN	R.STEWART	16-SEP-2011
± .01	± .005	± .5°	CHECKED	M.MCGEE	26-SEP-2011
			APPROVED	M.MCGEE	26-SEP-2011

1. BREAK ALL SHARP EDGES .015 MAX.
2. DO NOT SCALE DRAWING.
3. DIMENSIONS BASED UPON ASME Y14.5M-1994
4. MAX. ALL MACH. SURFACES 63
5. DRAWING UNITS: U.S. INCH

USED ON: MD-433810

MATERIAL: 6061-T6 ALUMINUM

FERMI NATIONAL ACCELERATOR LABORATORY
UNITED STATES DEPARTMENT OF ENERGY

NOVA-ANU TARGET HALL MEDIUM ENERGY TARGET TARGET RING

SCALE	DRAWING NUMBER	SHEET	REV
1:2	8875.112-MD-433807	1 OF 1	B

CREATED WITH : Ideas12NXSeries | GROUP: ACCELERATOR MECH. SUPPT.