REV	DESCRIPTION	DRAWN	DATE
		APPROVED	DATE

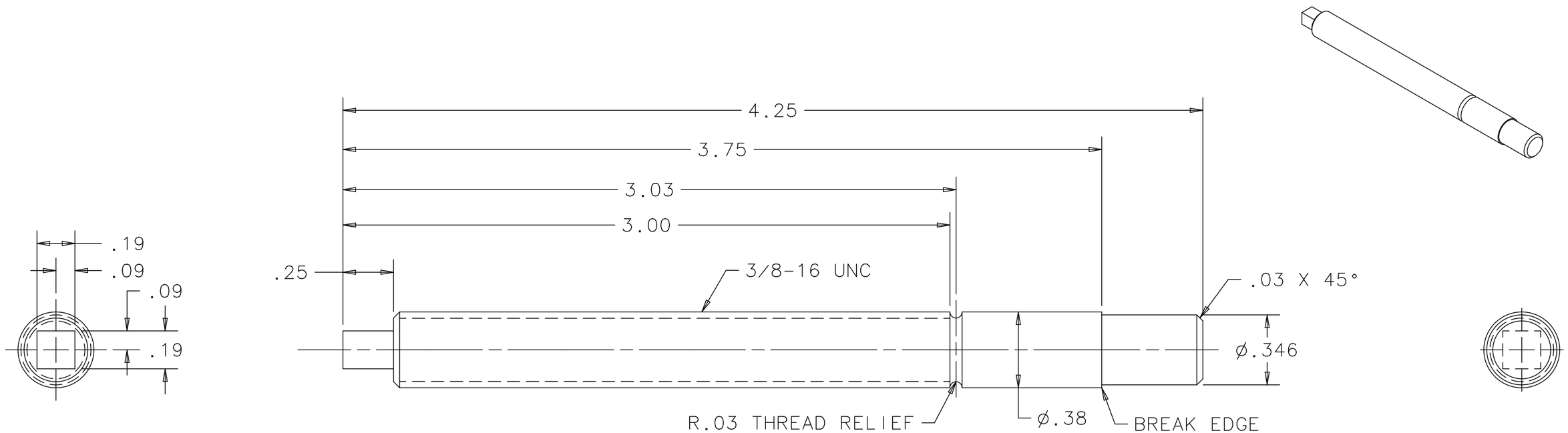

UNLESS OTHERWISE SPECIFIED			ORIGINATOR	M.MCGEE	16-SEP-2011
.XX	.XXX	ANGLES	DRAWN	R.STEWART	16-SEP-2011
± .02	± .005	± .5°	CHECKED	M.MCGEE	26-SEP-2011
			APPROVED	M.MCGEE	26-SEP-2011

1. BREAK ALL SHARP EDGES .015 MAX.
2. DO NOT SCALE DRAWING.
3. DIMENSIONS BASED UPON ASME Y14.5M-1994
4. MAX. ALL MACH. SURFACES 63
5. DRAWING UNITS: U.S. INCH

USED ON: MD-433613

MATERIAL: 316L STAINLESS STEEL ROD

FERMI NATIONAL ACCELERATOR LABORATORY
UNITED STATES DEPARTMENT OF ENERGY

NOVA-ANU TARGET HALL
MEDIUM ENERGY TARGET BAFFLE
BAFFLE ROD LOCKING

SCALE	DRAWING NUMBER	SHEET	REV
2:1	8875.112-MB-433806	1 OF 1	

CREATED WITH : Ideas12NXSeries | GROUP: ACCELERATOR MECH. SUPPT.

Created: 13:54:06 on 21-02-13 (D-M-Y) By: rstewart State: 3-RELEASED