REV	DESCRIPTION	DRAWN	DATE
		APPROVED	DATE

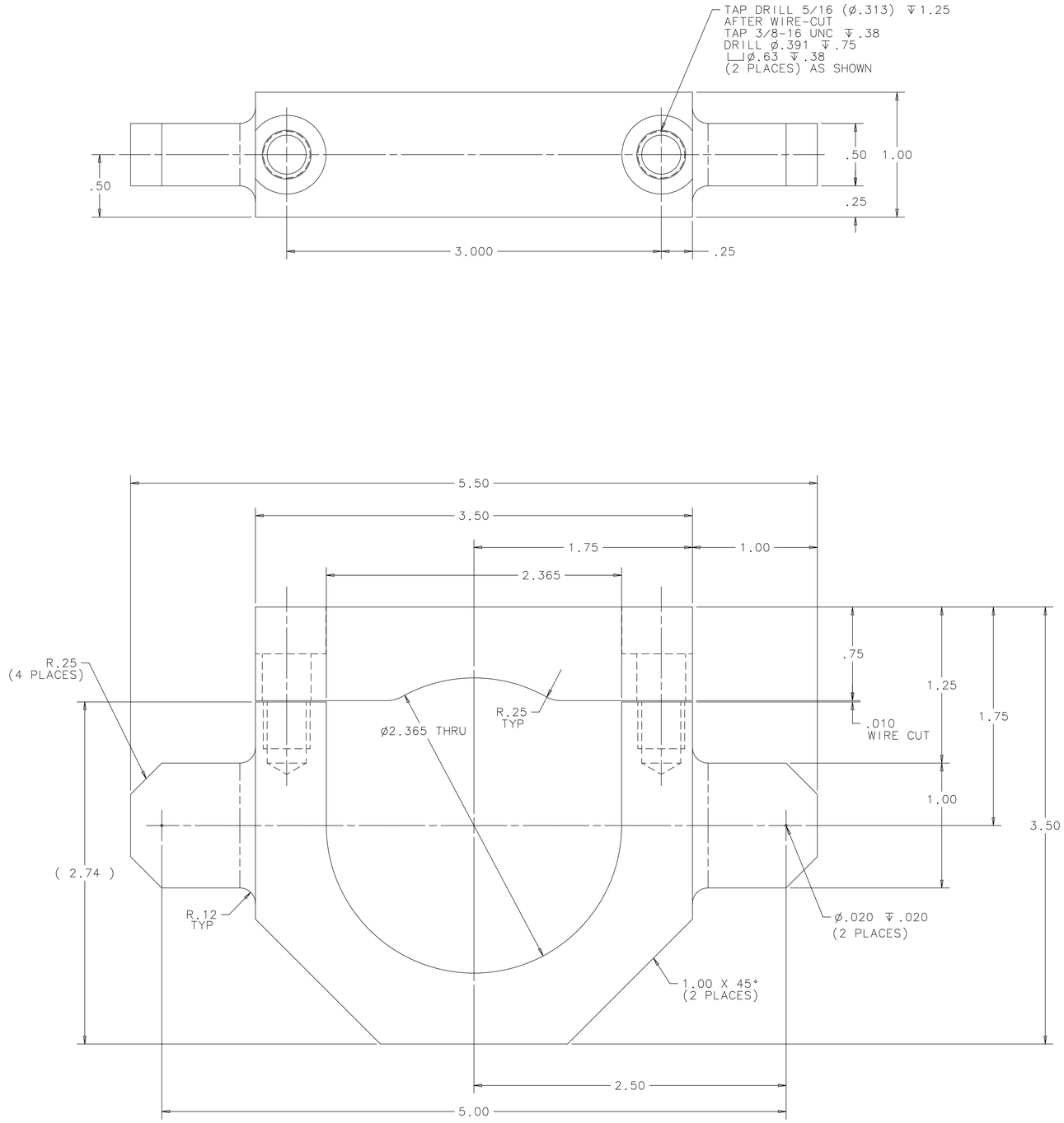

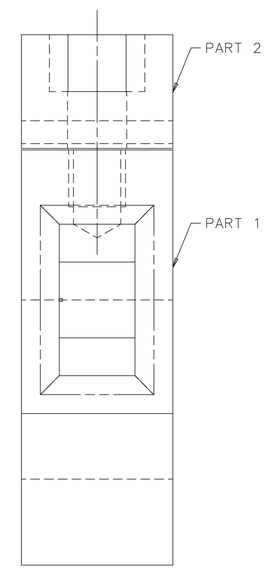

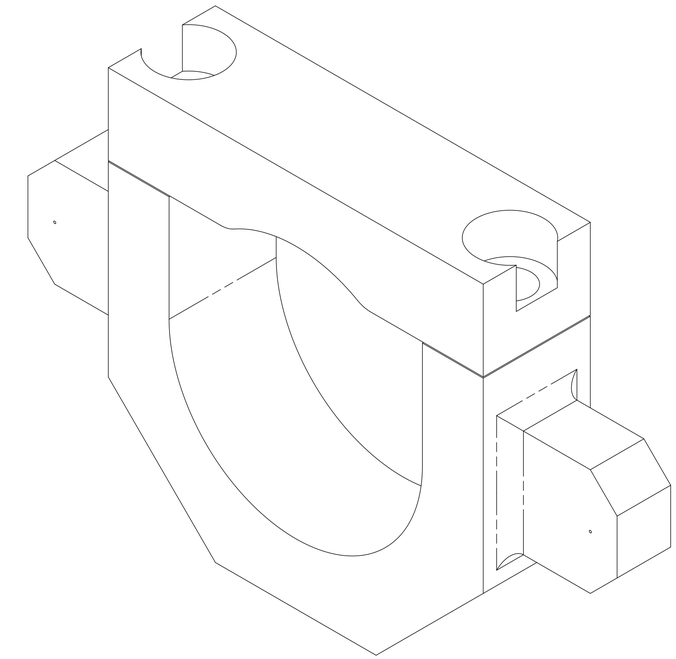

UNLESS OTHERWISE SPECIFIED			ORIGINATOR	M.MCGEE	14-SEP-2011
.XX	.XXX	ANGLES	DRAWN	R.STEWART	14-SEP-2011
± .01	± .005	±.25°	CHECKED	M.MCGEE	26-SEP-2011
			APPROVED	M.MCGEE	26-SEP-2011

1. BREAK ALL SHARP EDGES .015 MAX.
2. DO NOT SCALE DRAWING.
3. DIMENSIONS BASED UPON ASME Y14.5M-1994
4. MAX. ALL MACH. SURFACES 63
5. DRAWING UNITS: U.S. INCH

USED ON: MD-433613

MATERIAL: 6061-T6 ALUMINUM

FERMI NATIONAL ACCELERATOR LABORATORY
UNITED STATES DEPARTMENT OF ENERGY

NOVA-ANU TARGET HALL MEDIUM ENERGY TARGET BAFFLE LOCATING CLAMP

SCALE	DRAWING NUMBER	SHEET	REV
2:1	8875.112-MD-433805	1 OF 1	

CREATED WITH : Ideas12NXSeries | GROUP: ACCELERATOR MECH. SUPPT.