REV	DESCRIPTION	DRAWN	DATE
		APPROVED	DATE
A	USED ON ADDED	R.STEWART	04-JAN-2012
		M.MCGEE	04-JAN-2012

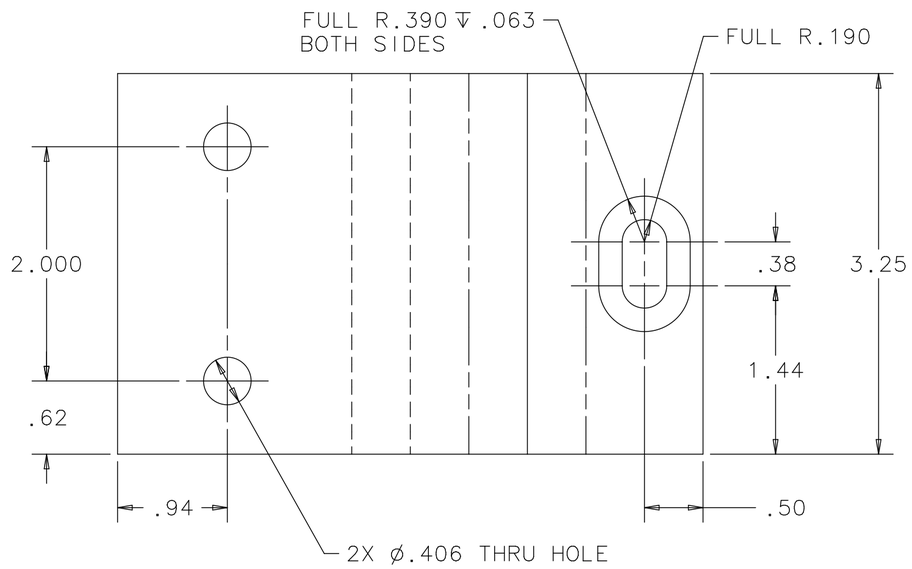

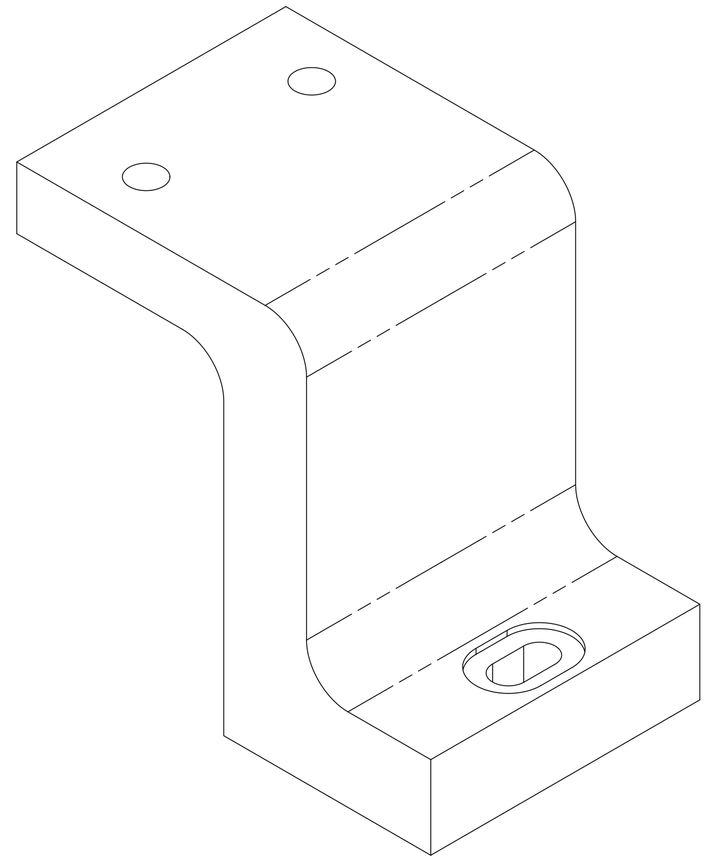

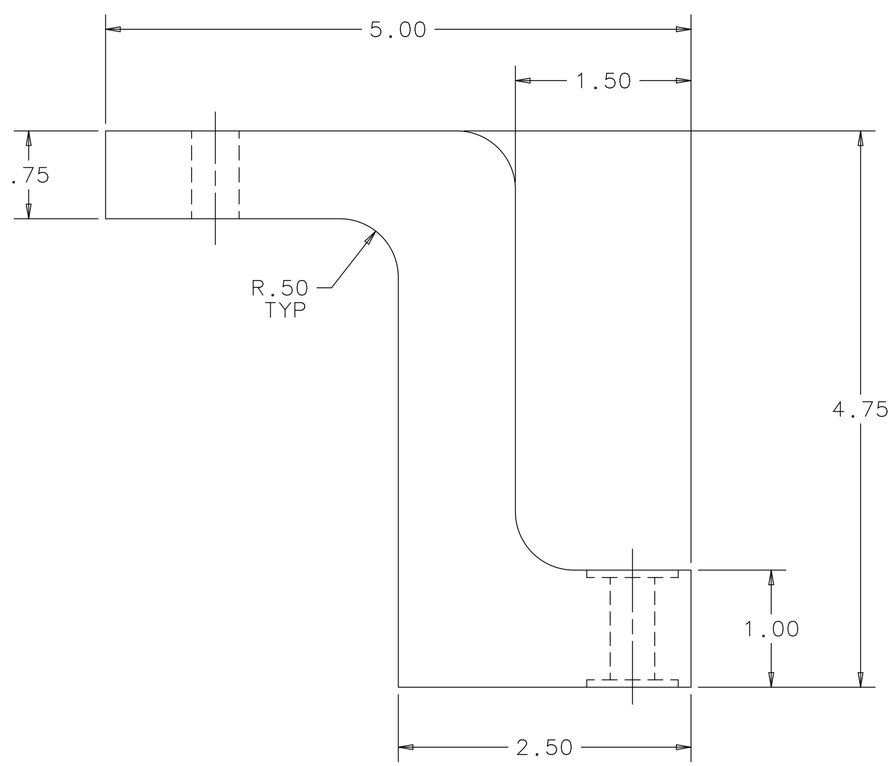

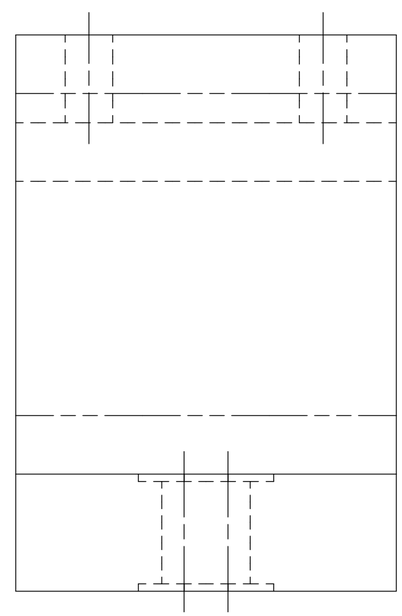

UNLESS OTHERWISE SPECIFIED			ORIGINATOR	M.MCGEE	26-SEP-2011
.XX	.XXX	ANGLES	DRAWN	R.STEWART	26-SEP-2011
± .01	± .005	± .5°	CHECKED	M.MCGEE	26-SEP-2011
1. BREAK ALL SHARP EDGES .015 MAX. 2. DO NOT SCALE DRAWING. 3. DIMENSIONS BASED UPON ASME Y14.5M-1994 4. MAX. ALL MACH. SURFACES 63 ✓ 5. DRAWING UNITS: U.S. INCH			APPROVED	M.MCGEE	26-SEP-2011
			USED ON	△A ME-433836	
			MATERIAL	6061-T6 ALUMINUM	

FERMI NATIONAL ACCELERATOR LABORATORY
UNITED STATES DEPARTMENT OF ENERGY

NOVA-ANU TARGET HALL
MEDIUM ENERGY TARGET BAFFLE
VERTICAL MOVEMENT BRACKET

SCALE	DRAWING NUMBER	SHEET	REV
1:1	8875.112-MC-433730	1 OF 1	A

CREATED WITH : Ideas12NXSeries | GROUP: ACCELERATOR MECH. SUPPT.