REV	DESCRIPTION	DRAWN	DATE
		APPROVED	DATE
A	3.50 WAS 2.25, FLATS ADDED, MATERIAL CHANGED, AND USED ON ADDED	R.STEWART	01-JUN-2011
		M.MCGEE	01-JUN-2011

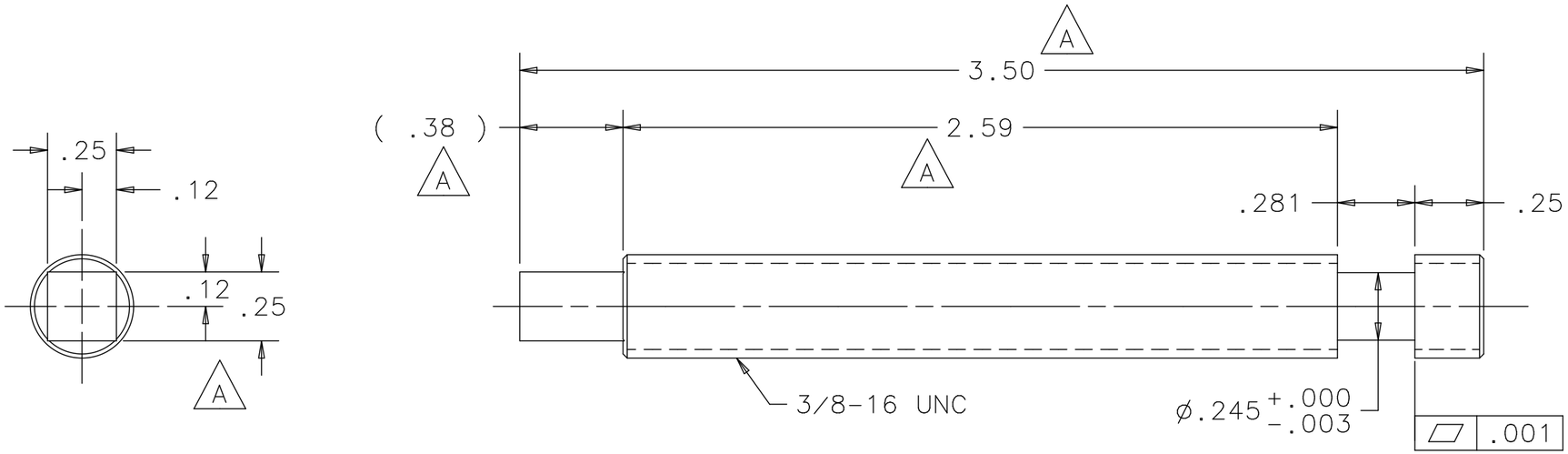

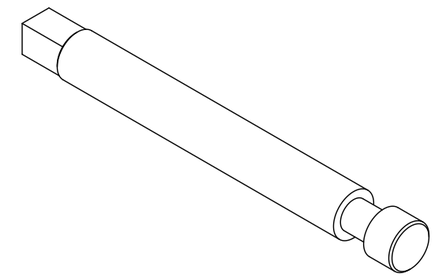

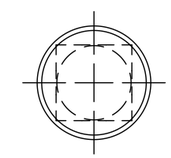

UNLESS OTHERWISE SPECIFIED			ORIGINATOR	M.MCGEE	14-APR-2011
.XX	.XXX	ANGLES	DRAWN	R.STEWART	14-APR-2011
± .01	± .005	± .5°	CHECKED	M.MCGEE	14-APR-2011
			APPROVED	M.MCGEE	14-APR-2011

1. BREAK ALL SHARP EDGES .015 MAX.
2. DO NOT SCALE DRAWING.
3. DIMENSIONS BASED UPON ASME Y14.5M-1994
4. MAX. ALL MACH. SURFACES 63
5. DRAWING UNITS: U.S. INCH

USED ON
MC-433582 - MC-433828 - ME-433836 (A)

MATERIAL
3/8-16 UNC 316L SS THREADED ROD (A)

FERMI NATIONAL ACCELERATOR LABORATORY
UNITED STATES DEPARTMENT OF ENERGY

NOVA-ANU TARGET HALL
MEDIUM ENERGY TARGET BAFFLE
SLIDE PLATE THREADED ROD

SCALE	DRAWING NUMBER	SHEET	REV
2:1	8875.112-MB-433727	1 OF 1	A

CREATED WITH : Ideas12NXSeries GROUP: ACCELERATOR MECH. SUPPT.

NOTE: .0002 TUNGSTEN DISULFIDE (WS2) COATING AFTER ALL MACHINING