REV	DESCRIPTION	DRAWN	DATE
		APPROVED	DATE
A	3/8-24 UNF WAS 5/16-24 UNF, .03, AND .06 CHAMFER ADDED	R.STEWART	25-MAY-2011
		M.MCGEE	20-SEP-2011

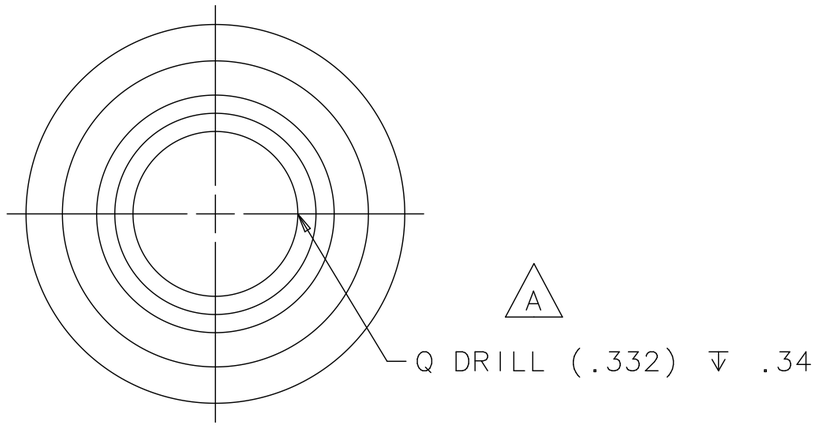

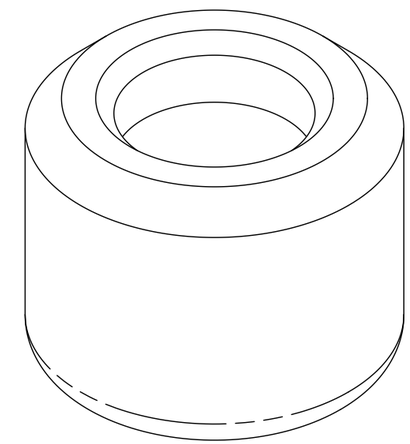

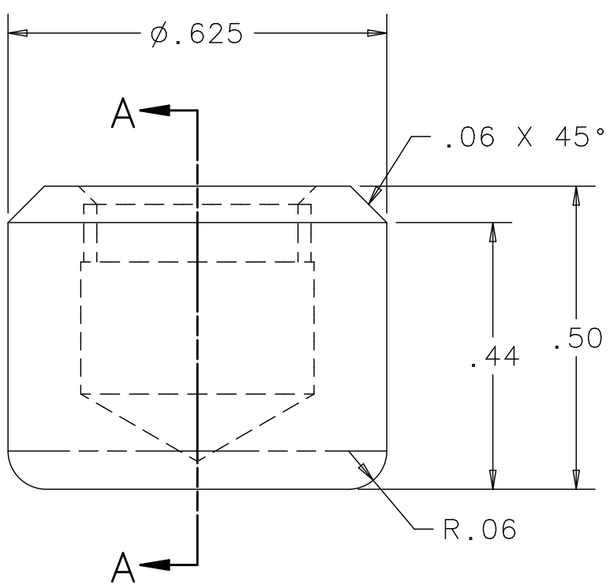

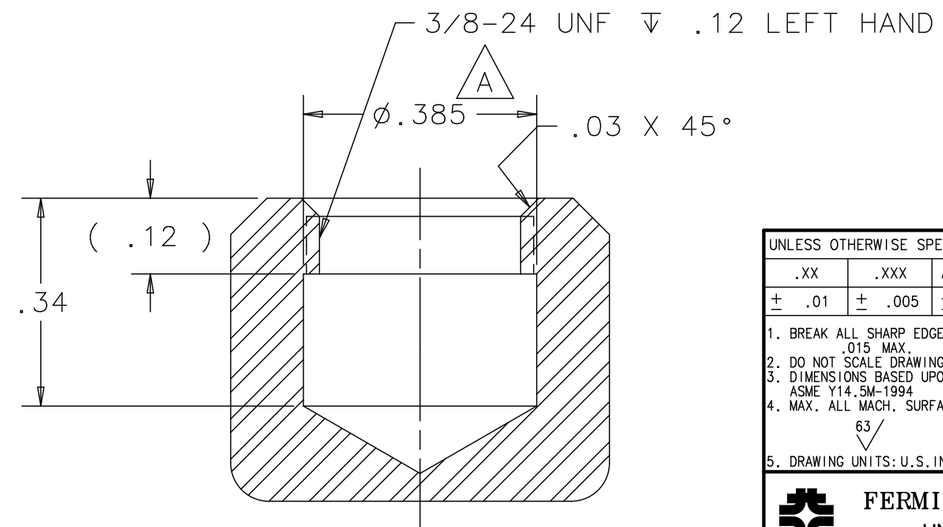

SECTION A-A
SCALE 4:1

UNLESS OTHERWISE SPECIFIED			ORIGINATOR	M.MCGEE	10-MAR-2011
.XX	.XXX	ANGLES	DRAWN	R.STEWART	10-MAR-2011
± .01	± .005	± .5°	CHECKED	M.MCGEE	14-MAR-2011
			APPROVED	M.MCGEE	14-MAR-2011

1. BREAK ALL SHARP EDGES .015 MAX.
2. DO NOT SCALE DRAWING.
3. DIMENSIONS BASED UPON ASME Y14.5M-1994
4. MAX. ALL MACH. SURFACES 63
5. DRAWING UNITS: U.S. INCH

USED ON: MD-433613 - MD-433810

MATERIAL: 316L STAINLESS STEEL

FERMI NATIONAL ACCELERATOR LABORATORY
UNITED STATES DEPARTMENT OF ENERGY

NOVA-ANU TARGET HALL
MEDIUM ENERGY TARGET BAFFLE
TARGET LEVELING FOOT SWIVEL

SCALE	DRAWING NUMBER	SHEET	REV
4:1	8875.112-MB-433710	1 OF 1	A

CREATED WITH : Ideas12NXSeries | GROUP: ACCELERATOR MECH. SUPPT.