REV	DESCRIPTION	DRAWN	DATE
		APPROVED	DATE
A	USED ON ADDED	R.STEWART	04-JAN-2012
		M.MCGEE	04-JAN-2012

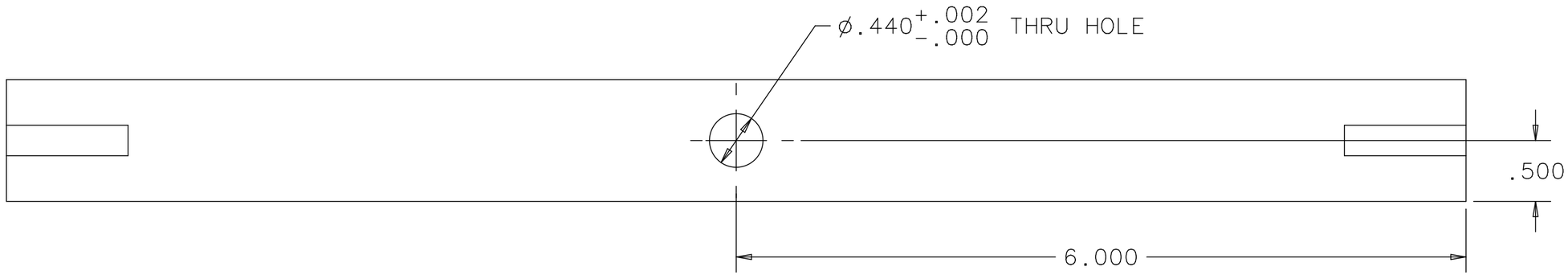

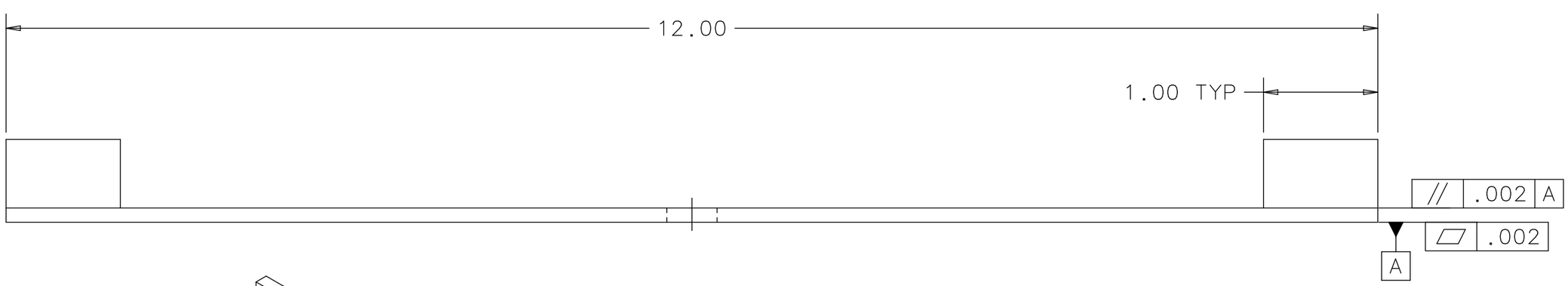

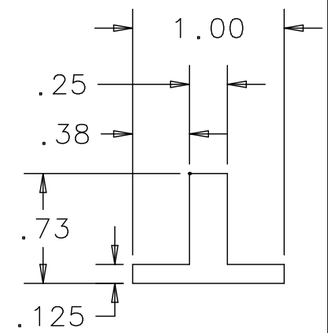

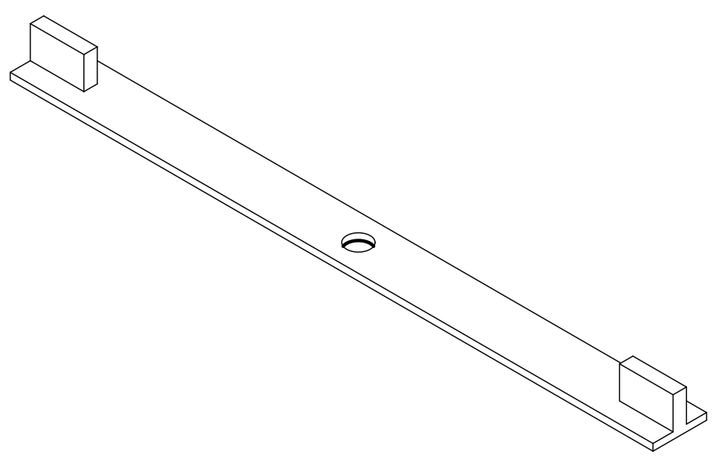

UNLESS OTHERWISE SPECIFIED			ORIGINATOR	M.MCGEE	28-SEP-2010
.XX	.XXX	ANGLES	DRAWN	M.KIELAR	28-SEP-2010
± .01	± .005	± .5°	CHECKED	M.MCGEE	10-NOV-2010
			APPROVED	M.MARTENS	10-NOV-2010

1. BREAK ALL SHARP EDGES .015 MAX.
2. DO NOT SCALE DRAWING.
3. DIMENSIONS BASED UPON ASME Y14.5M-1994
4. MAX. ALL MACH. SURFACES 63
5. DRAWING UNITS: U.S. INCH

USED ON (A) MC-433637 - MC-433835

MATERIAL 6061-T6 ALUMINUM

FERMI NATIONAL ACCELERATOR LABORATORY
UNITED STATES DEPARTMENT OF ENERGY

NUMI TARGET HALL
MEDIUM ENERGY TARGET BAFFLE
TENSION SYSTEM CENTER PLATE

SCALE	DRAWING NUMBER	SHEET	REV
1:1	8875.116-MB-433640	1 OF 1	A

CREATED WITH : Ideas12NXSeries GROUP: ACCELERATOR MECH. SUPPT.