REV	DESCRIPTION	DRAWN / APPROVED	DATE / DATE
A	ø.380 HOLE WAS ø.260, AND ø1.00/ø.78 C'BORE WAS ø.719	R.STEWART	25-MAY-2011
		M.MCGEE	20-SEP-2011
B	ø1.00 C'BORE WAS ø.78, AND 4X C'BORE ON OD REMOVED	R.STEWART	30-JAN-2012
		M.MCGEE	31-JAN-2012

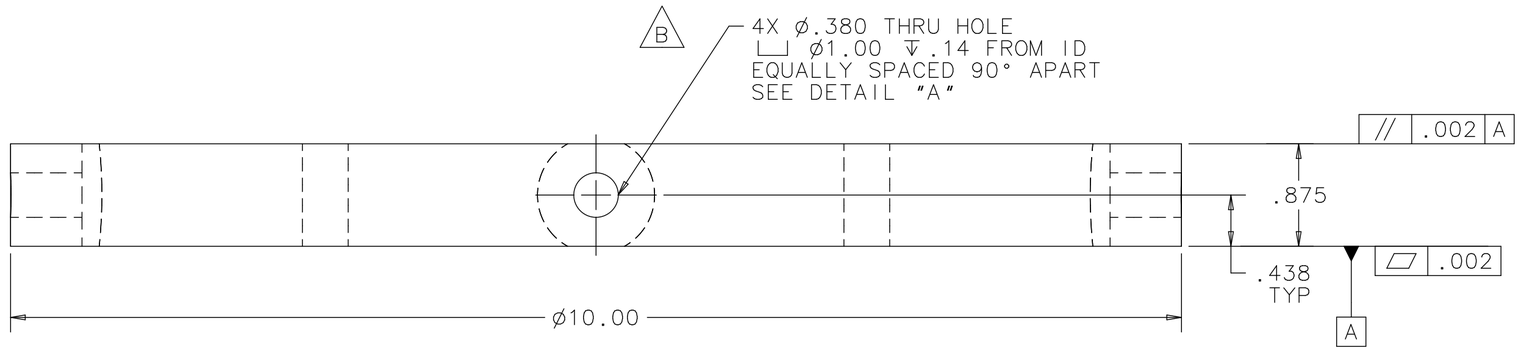

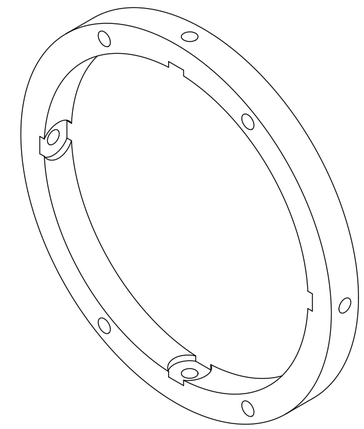

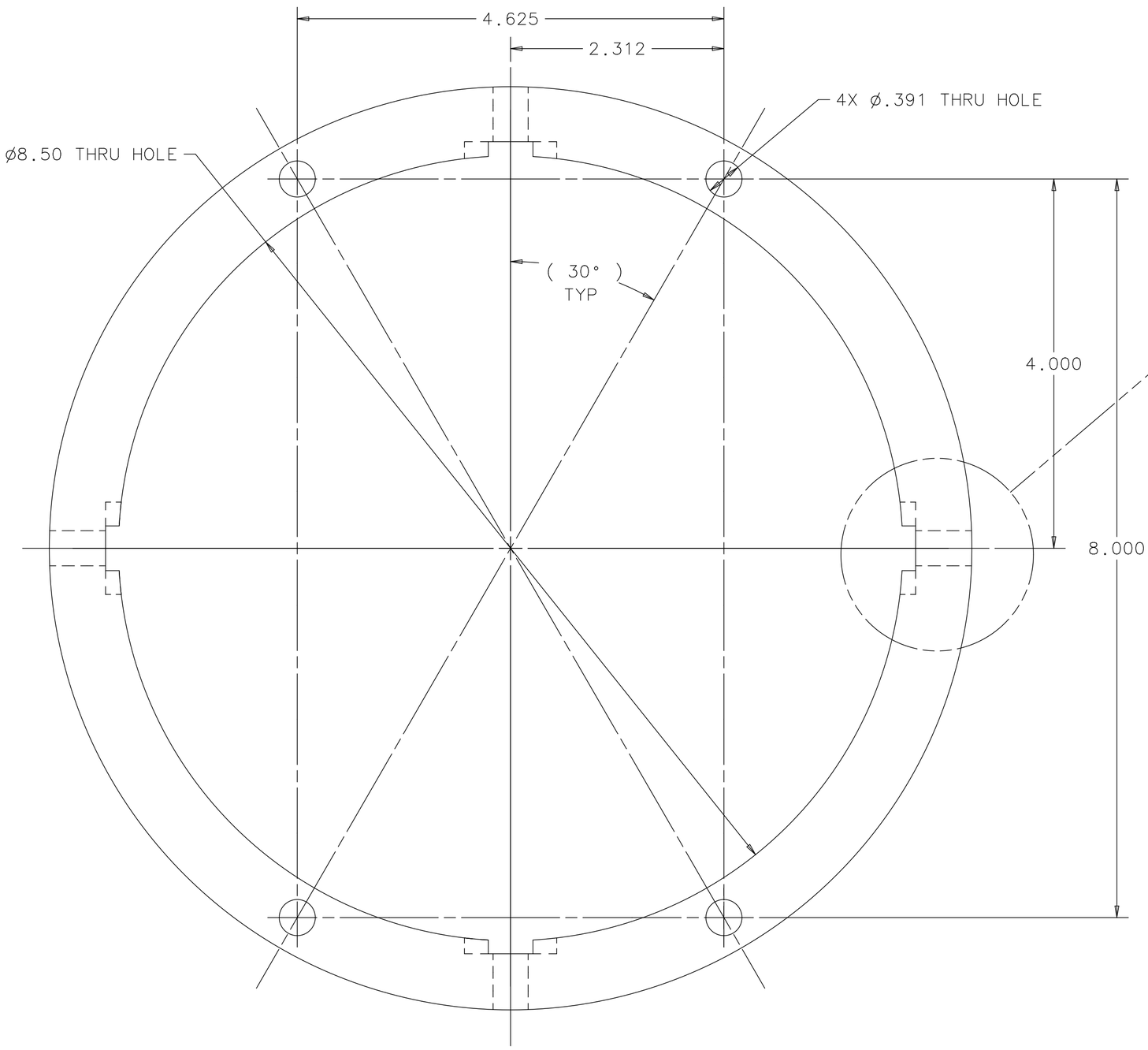

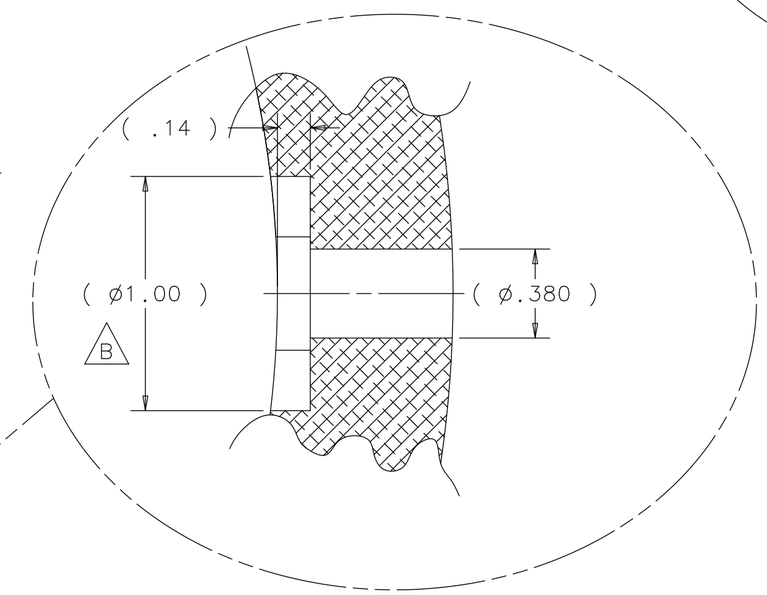

DETAIL A
SCALE 2:1
TYP 4 PLACES

UNLESS OTHERWISE SPECIFIED					
.XX	.XXX	ANGLES	ORIGINATOR	M.MCGEE	28-SEP-2010
± .01	± .005	± .5°	DRAWN	R.STEWART	28-SEP-2010
			CHECKED	M.MCGEE	10-NOV-2010
			APPROVED	M.MARTENS	10-NOV-2010
			USED ON	MD-433613	
			MATERIAL	6061-T6 ALUMINUM	

1. BREAK ALL SHARP EDGES .015 MAX.
2. DO NOT SCALE DRAWING.
3. DIMENSIONS BASED UPON ASME Y14.5M-1994
4. MAX. ALL MACH. SURFACES 63
5. DRAWING UNITS: U.S. INCH

FERMI NATIONAL ACCELERATOR LABORATORY
UNITED STATES DEPARTMENT OF ENERGY

NOVA-ANU TARGET HALL
MEDIUM ENERGY TARGET BAFFLE
BAFFLE RING

SCALE	DRAWING NUMBER	SHEET	REV
1:1	8875.112-MC-433589	1 OF 1	B

CREATED WITH : Ideas12NXSeries | GROUP: ACCELERATOR MECH. SUPPT.