REV	DESCRIPTION	DRAWN	DATE
		APPROVED	DATE
A	.20 RADIUS WAS .14	R.STEWART	18-OCT-2011
		M.MCGEE	04-JAN-2012

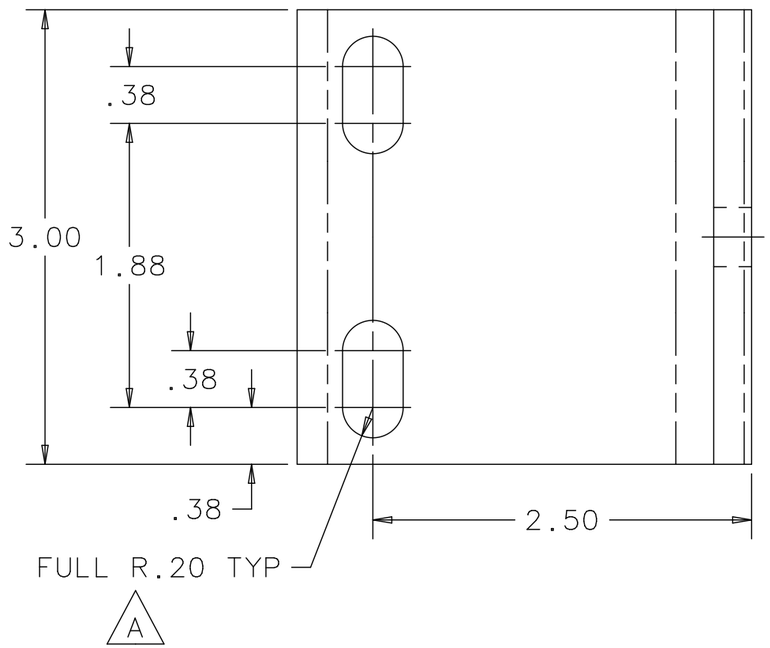

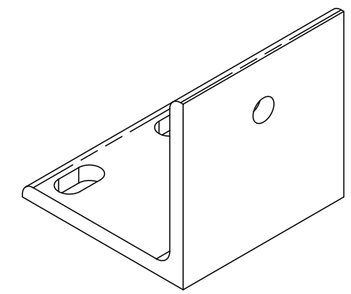

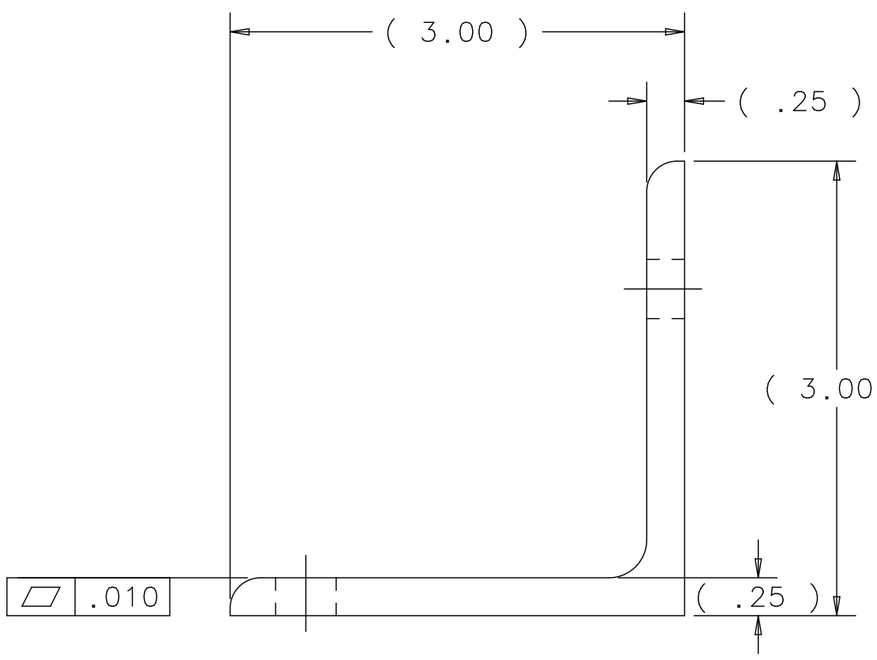

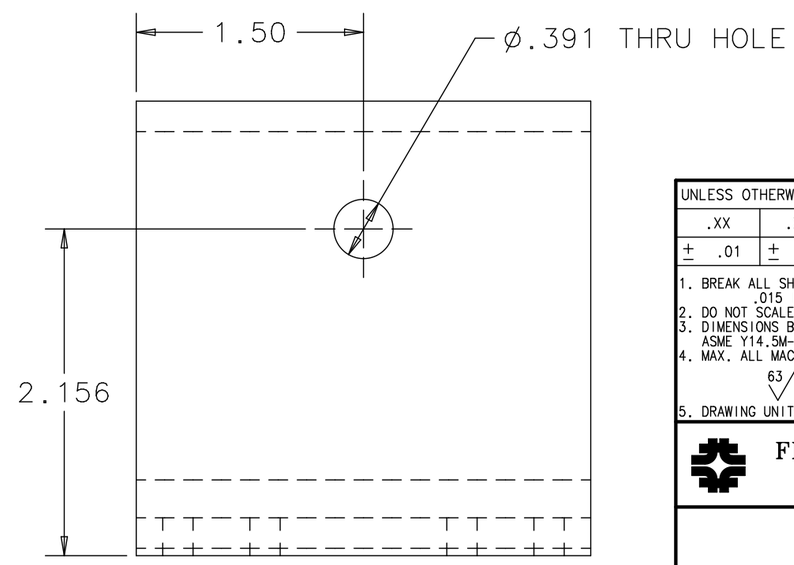

UNLESS OTHERWISE SPECIFIED			ORIGINATOR	M.MCGEE	28-SEP-2010
.XX	.XXX	ANGLES	DRAWN	R.STEWART	28-SEP-2010
± .01	± .005	± .5°	CHECKED	M.MCGEE	10-NOV-2010
			APPROVED	M.MARTENS	10-NOV-2010

1. BREAK ALL SHARP EDGES .015 MAX.
2. DO NOT SCALE DRAWING.
3. DIMENSIONS BASED UPON ASME Y14.5M-1994
4. MAX. ALL MACH. SURFACES 63
5. DRAWING UNITS: U.S. INCH

USED ON: ME-433579 - ME-433836

MATERIAL: 3 X 3 X .25 6061-T6 ALUMINUM ANGLE

FERMI NATIONAL ACCELERATOR LABORATORY
UNITED STATES DEPARTMENT OF ENERGY

NOVA-ANU TARGET HALL
MEDIUM ENERGY TARGET
TARGET RING BRACKET ANGLE

SCALE	DRAWING NUMBER	SHEET	REV
1:1	8875.112-MB-433588	1 OF 1	A

CREATED WITH : Ideas12NXSeries | GROUP: ACCELERATOR MECH. SUPPT.

Created: 13:49:38 on 21-02-13 (D-M-Y) By: rstewart State: 3-RELEASED