REV	DESCRIPTION	DRAWN	DATE
		APPROVED	DATE
A	SLOTS WAS ø.266 HOLES, NOTE ADDED, AND .06 RADIUS WAS .03	R.STEWART	28-JAN-2011
		M.MCGEE	04-JAN-2012
B	NOTE FIXED	R.STEWART	05-FEB-2013
		M.MCGEE	05-FEB-2013

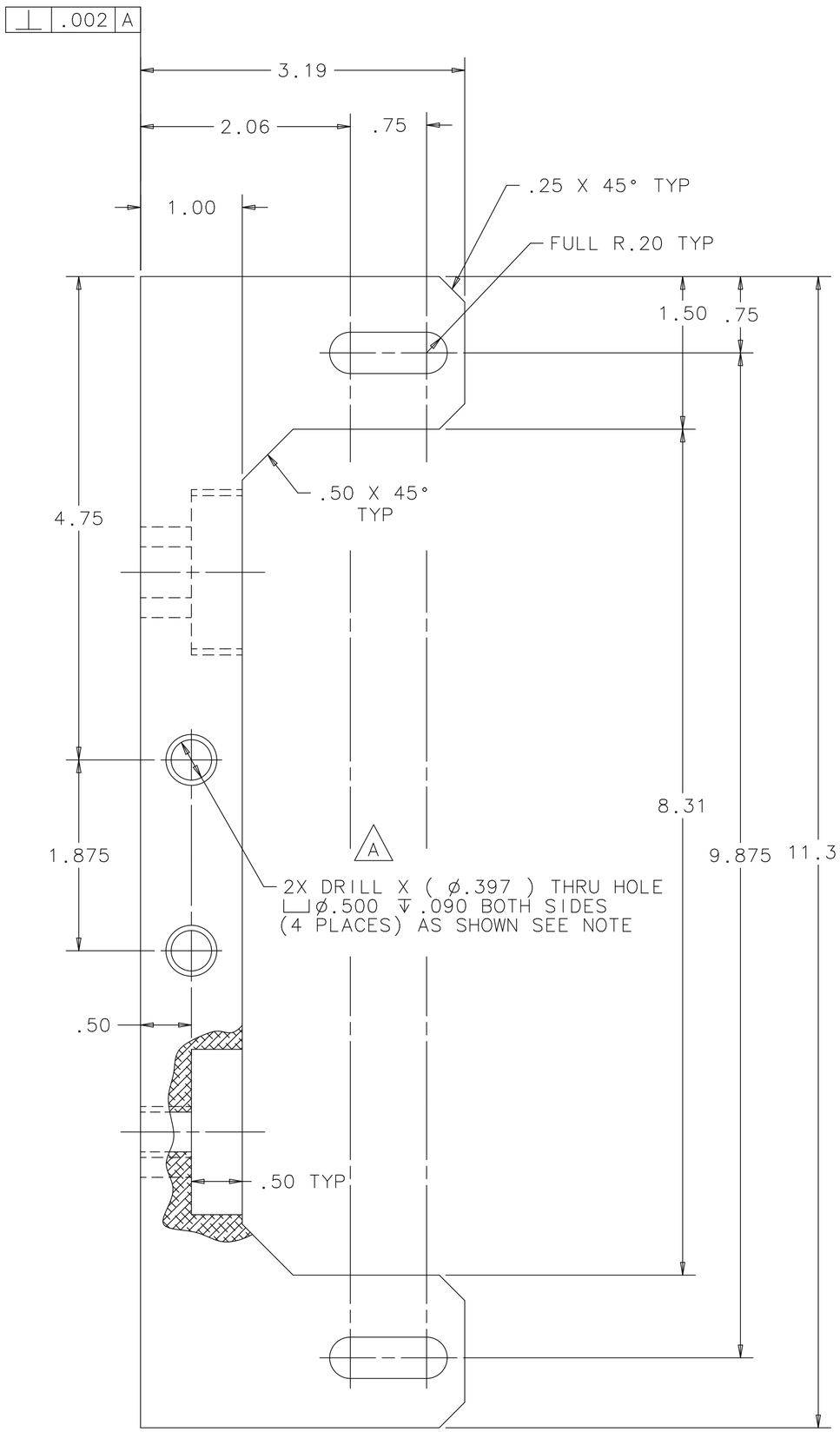

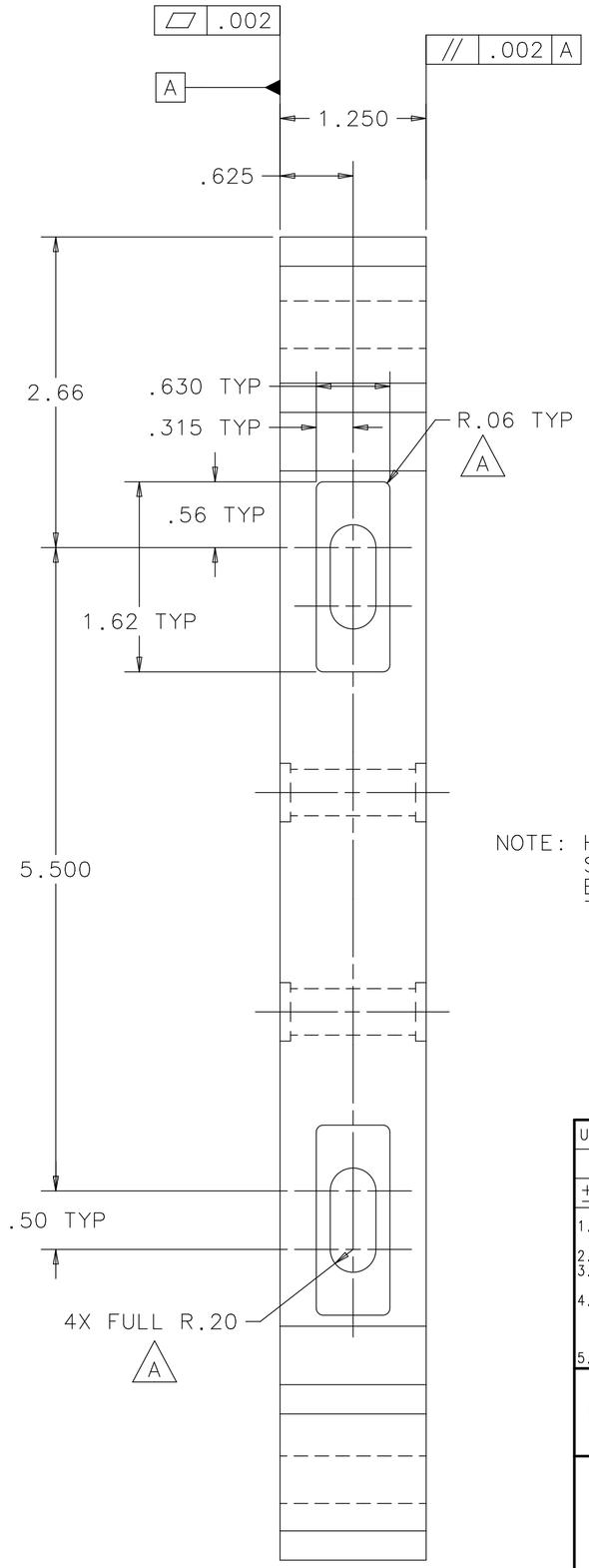

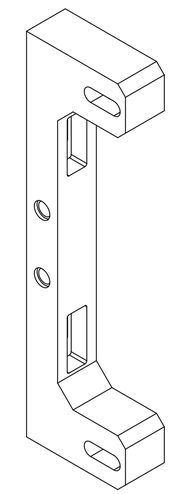

B

NOTE: HOLES ARE PRE-DRILLED FOR 3/8-16 UNC X .520 LG. SS TIME-SERT (PART NO. 03812) TO BE INSERTED FROM BOTH SIDES (2 PER HOLE) USING KIT (0381). TO BE INSTALLED BY FERMILAB.

UNLESS OTHERWISE SPECIFIED			ORIGINATOR	M.MCGEE	28-SEP-2010
.XX	.XXX	ANGLES	DRAWN	R.STEWART	28-SEP-2010
± .01	± .005	± .5°	CHECKED	M.MCGEE	10-NOV-2010
1. BREAK ALL SHARP EDGES .015 MAX. 2. DO NOT SCALE DRAWING. 3. DIMENSIONS BASED UPON ASME Y14.5M-1994 4. MAX. ALL MACH. SURFACES 63 5. DRAWING UNITS: U.S. INCH			APPROVED	M.MARTENS	10-NOV-2010
			USED ON	ME-433579 - ME-433836	
			MATERIAL	6061-T6 ALUMINUM	

FERMI NATIONAL ACCELERATOR LABORATORY
UNITED STATES DEPARTMENT OF ENERGY

NOVA-ANU TARGET HALL MEDIUM ENERGY TARGET TARGET RING BRACKET

SCALE	DRAWING NUMBER	SHEET	REV
1:1	8875.112-MC-433587	1 OF 1	B

CREATED WITH : Ideas12NXSeries GROUP: ACCELERATOR MECH. SUPPT.