REV	DESCRIPTION	DRAWN	DATE
		APPROVED	DATE
A	NOTE ADDED	R.STEWART	06-JUN-2012
		M.MCGEE	06-JUN-2012

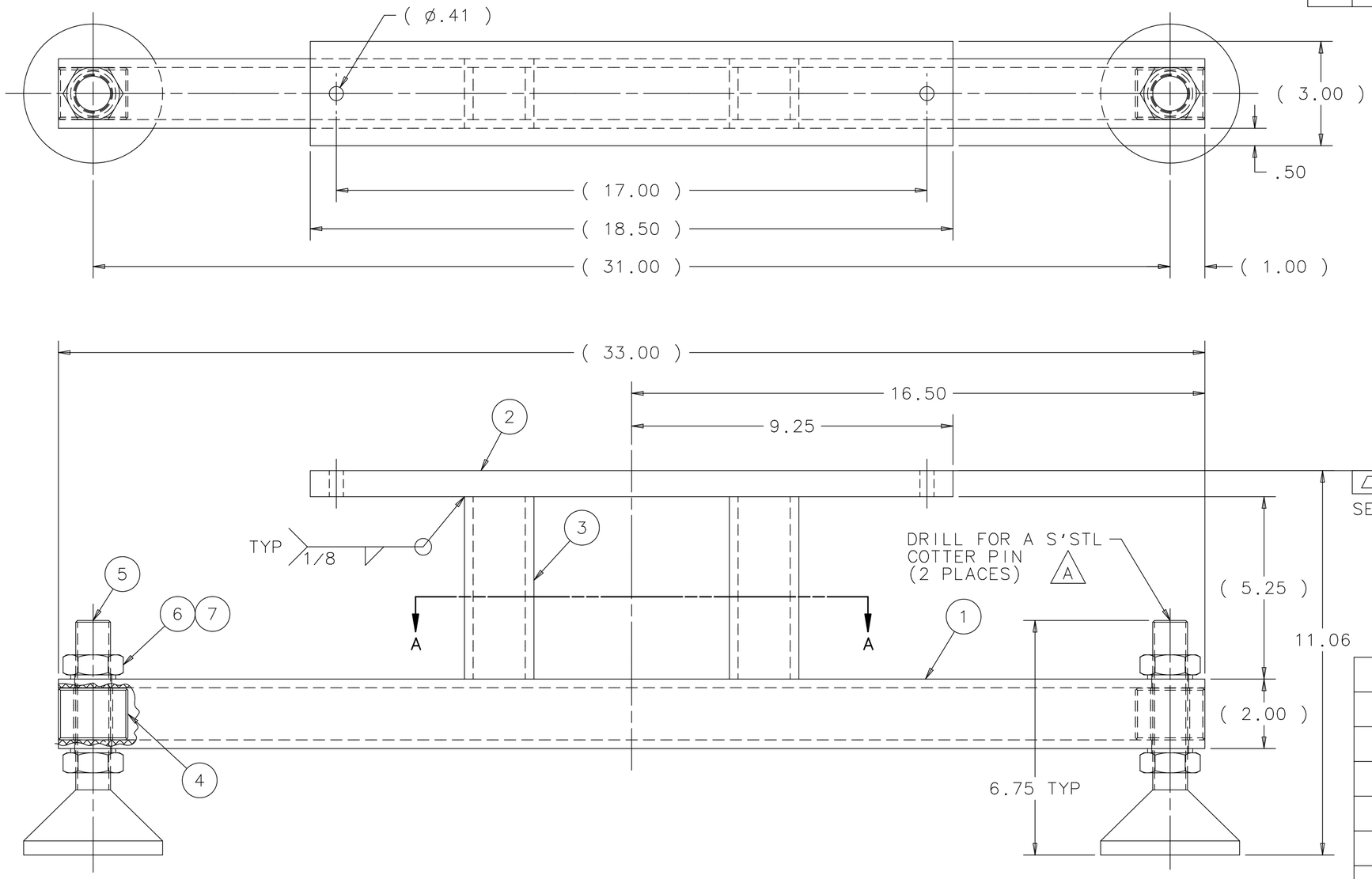

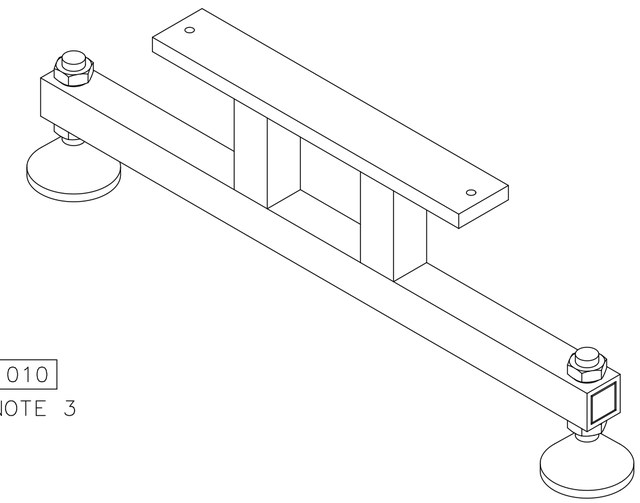

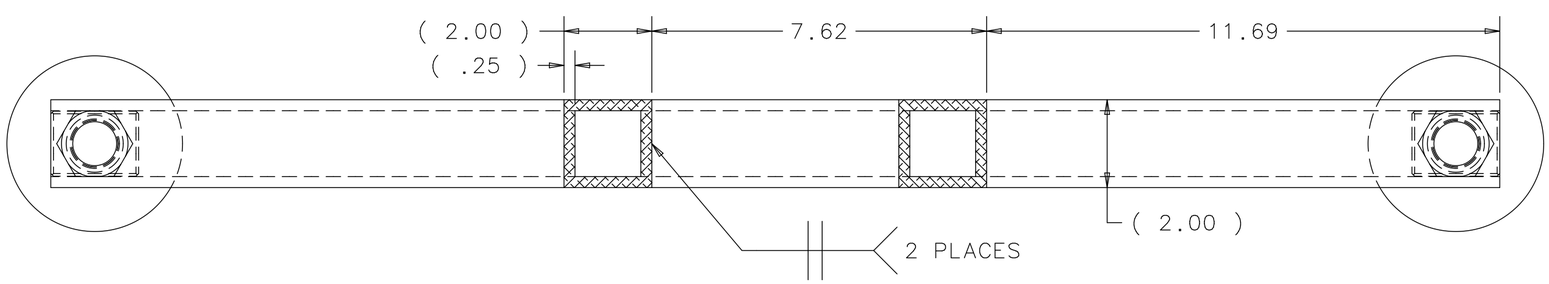

SECTION A-A
SCALE 3:8

NOTES: 1. ALL WELDS TO BE PERFORMED BY FERMILAB.

2. USE WELDING ROD ER4043 FOR ALL WELDS.

3. ITEM 2 (MB-433607) CAN BE MACHINED TO ACHIVE FLATNESS IF NECESSARY.

ITEM	PART NO.	DESCRIPTION OR SIZE	QTY.
7	SCHNORR PART NO. S 25.4 SS	1" SCHNORR SAFETY WASHER SS	4
6	MCMASTER-CARR P/N 94805A038 OR EQUAL	1-8 JAM HEX NUT 316L	4
5	CARR LANE P/N CL-16-SLF-8-S	1.00" STUD LEVELING FOOT (WITH MODIFED THREADED STUD)	2
4	MB-433824	DOWNSTREAM STAND INSERT	2
3		6063-T52 ALUMINUM SQUARE TUBING 2 X 2 X .25	2
2	MB-433607	DOWNSTREAM STAND MOUNTING PLATE	1
1	MB-433823	DOWNSTREAM STAND BASE	1

PARTS LIST

UNLESS OTHERWISE SPECIFIED			ORIGINATOR	M.MCGEE	19-AUG-2011
.XX	.XXX	ANGLES	DRAWN	R.STEWART	19-AUG-2011
± .01	± .005	± .5°	CHECKED	D.SCHMITT	03-JAN-2012
			APPROVED	M.MCGEE	03-JAN-2012

1. BREAK ALL SHARP EDGES .015 MAX.
2. DO NOT SCALE DRAWING.
3. DIMENSIONS BASED UPON ASME Y14.5M-1994
4. MAX. ALL MACH. SURFACES 63
5. DRAWING UNITS: U.S. INCH

USED ON: ME-433829

MATERIAL: SEE PARTS LIST ABOVE

FERMI NATIONAL ACCELERATOR LABORATORY
UNITED STATES DEPARTMENT OF ENERGY

NUMI TARGET HALL MEDIUM ENERGY TARGET DOWNSTREAM STAND WELDMENT

SCALE	DRAWING NUMBER	SHEET	REV
3/8:1	8875.112-MC-433822	1 OF 1	A

CREATED WITH : Ideas12NXSeries GROUP: ACCELERATOR MECH. SUPPT.