REV	DESCRIPTION	DRAWN / APPROVED	DATE
A	ITEM 2 UPDATED, SECTION C-C ADDED, AND ø.56 THRU HOLE ADDED	R.STEWART	01-FEB-2012
		M.MCGEE	22-FEB-2012
B	ITEM 3 UPDATED, DETAIL VIEW A, NOTE ADDED, AND SLOTS FOR ITEM 3 REDIMENSIONED	R.STEWART	29-MAR-2012
		M.MCGEE	29-MAR-2012

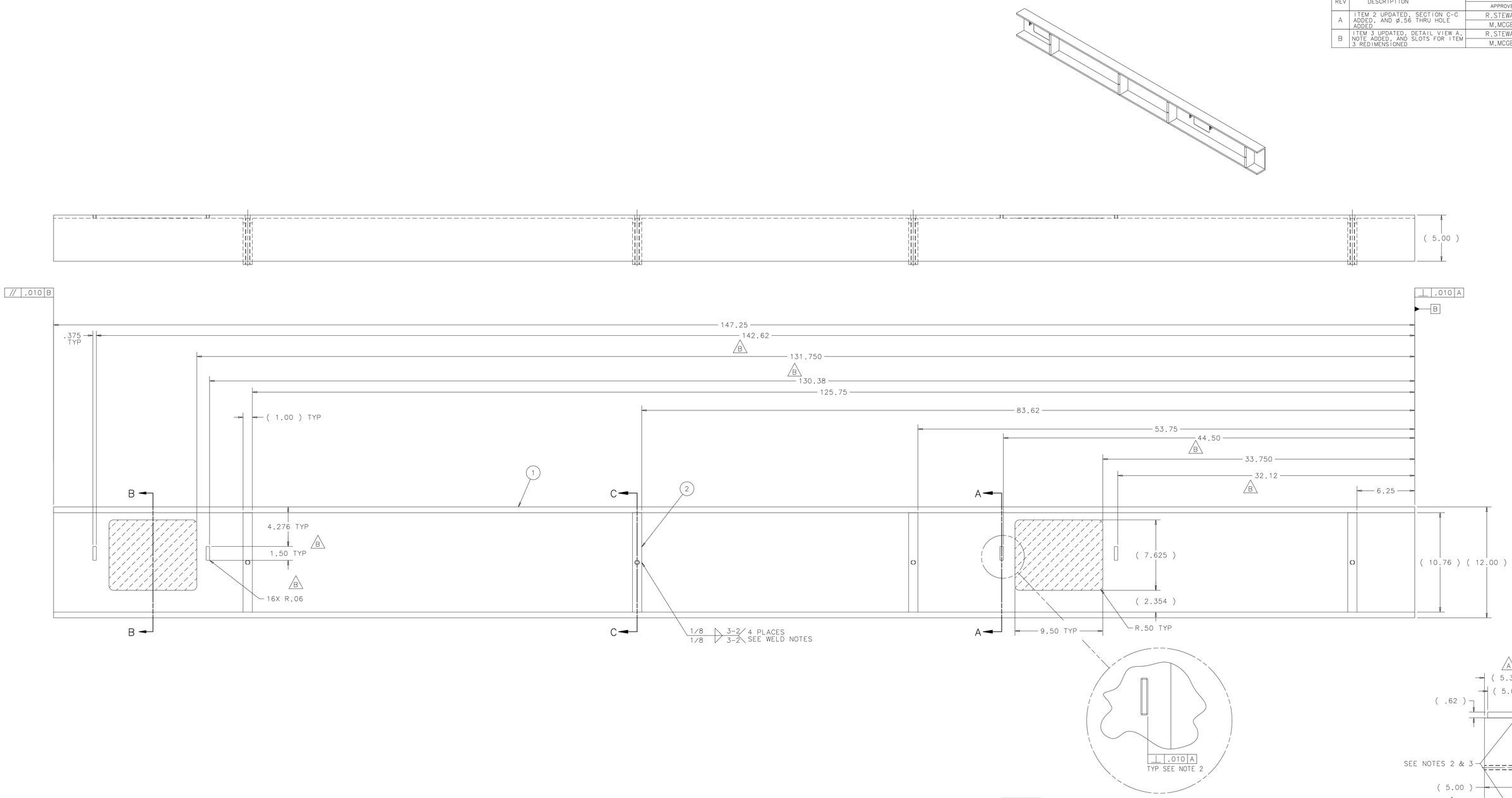

DETAIL A
SCALE 1:2

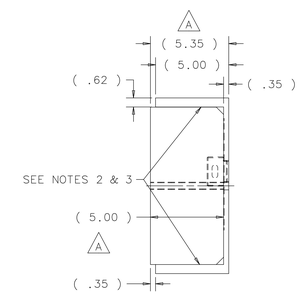

RIGHT VIEW
SCALE 1:4

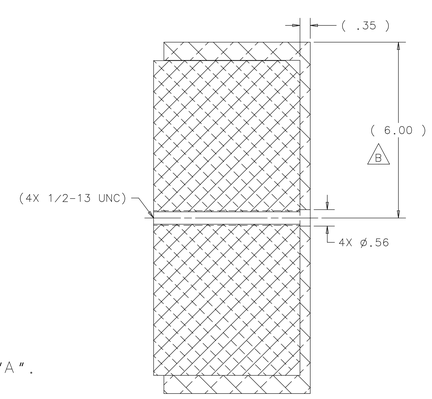

SECTION C-C
SCALE 1:2 B

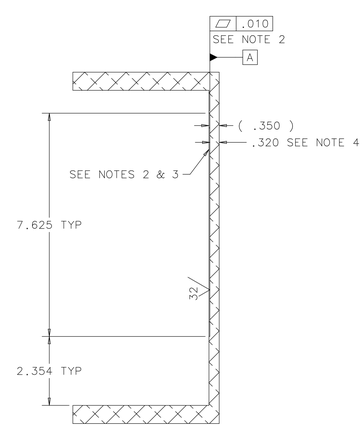

SECTION B-B
SCALE 1:2

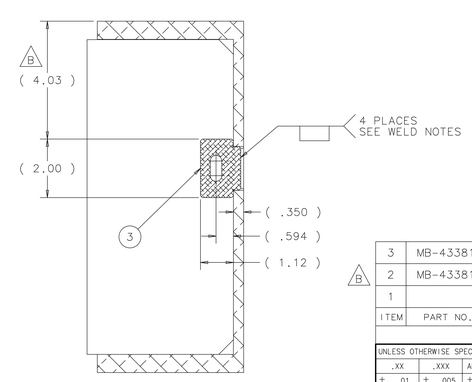

SECTION A-A
CHANNEL TAB WELD
TYPICAL 4 PLACES B
SCALE 1:2

WELD NOTES: 1. ALL WELDS TO BE PERFORMED BY FERMILAB.

2. USE WELDING ROD ER4043 FOR ALL WELDS.

NOTES: 1. ALL MACHINING TO BE DONE BEFORE WELDING, EXCEPT FOR SECTION C-C.

2. ONLY SHADED AREA TO BE MACHINED TO .320" DIMENSION WITH CLEAN UP CUT. FLATNESS APPLIES ONLY IN SHADE AREA. THIS SURFACE TO BE SET AS DATUM "A". THE REST OF INSIDE SURFACES TO BE LEFT UNMACHINED.

3. ONLY INSIDE OF CHANNEL WEB (SHADED AREA)CAN BE MACHINED.

4. DIMENSIONS AND GD&T IN SECTION B-B TO BE TAKEN FROM AND APPLIED FROM MACHINED (SHADED AREA) SURFACE (DATUM "A").

5. MINIMUM CLEAN UP CUT PERMISSIBLE ON TOP AND BOTTOM OF CHANNEL FOR MACHINING PURPOSES

B 6. ITEM 3 (FRAME HANGER CHANNEL TAB) REMOVED FROM TOP AND FRONT VIEW FOR CLARITY. SEE DETAIL VIEW A AND SECTION A-A.

7. WEIGHT 75 LBS.

ITEM	PART NO.	DESCRIPTION OR SIZE	QTY.
3	MB-433817	FRAME HANGER CHANNEL TAB	4
2	MB-433816	CHANNEL GUSSET	4
1		12 X .350 X 5.00 6061-T6 EXTRUDED - ALUMINUM ASSOC. ALUMINUM CHANNEL	1

PARTS LIST

UNLESS OTHERWISE SPECIFIED			ORIGINATOR	M.MCGEE	27-SEP-2010
.XX	.XXX	ANGLES	DRAWN	R.STEWART	27-SEP-2010
± .01	± .005	± .5°	CHECKED	D.SCHMITT	03-JAN-2012
			APPROVED	M.MCGEE	03-JAN-2012

1. BREAK ALL SHARP EDGES .015 MAX.
2. DO NOT SCALE DRAWING.
3. DIMENSIONS BASED UPON ASME Y14.5M-1994
4. MAX. ALL MACH. SURFACES 63
5. DRAWING UNITS: U.S. INCH

USED ON: ME-433821

MATERIAL: SEE PARTS LIST ABOVE

FERMI NATIONAL ACCELERATOR LABORATORY
UNITED STATES DEPARTMENT OF ENERGY

NOVA-ANU TARGET HALL
MEDIUM ENERGY TARGET
WELDED LEFT CHANNEL

SCALE	DRAWING NUMBER	SHEET	REV
1:4	8875.112-ME-433819	1 OF 1	B

CREATED WITH : Ideas12NXSeries GROUP: ACCELERATOR MECH. SUPPT.