REV	DESCRIPTION	DRAWN	DATE
		APPROVED	DATE
A	NOTE ADDED	R.STEWART	13-FEB-2012
		M.MCGEE	22-FEB-2012

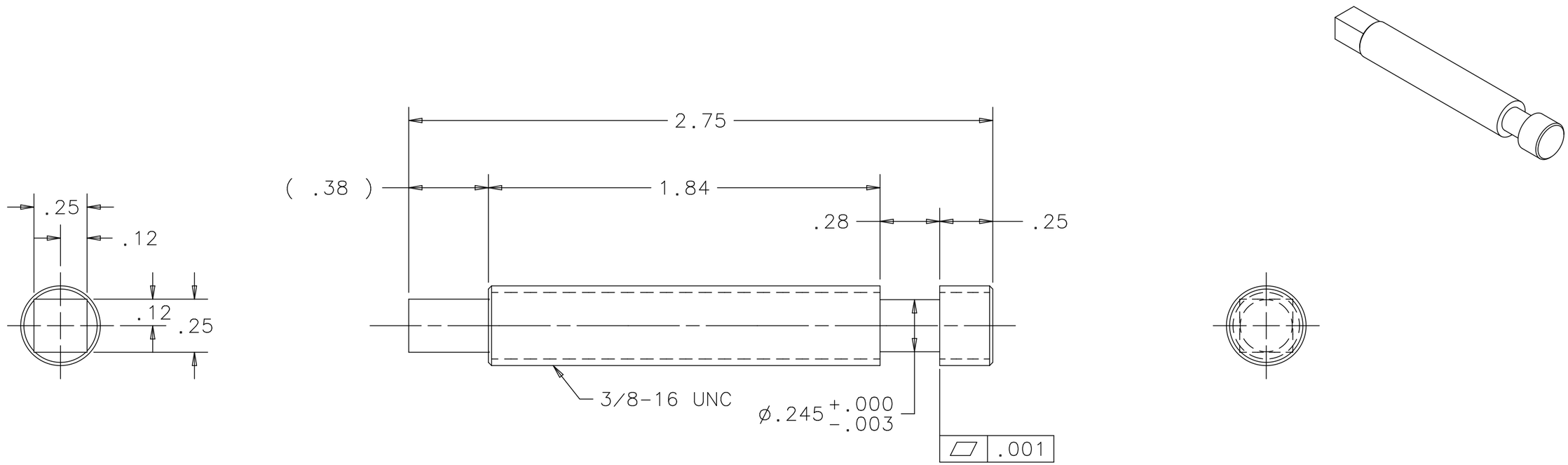

UNLESS OTHERWISE SPECIFIED			ORIGINATOR	M.MCGEE	14-NOV-2011
.XX	.XXX	ANGLES	DRAWN	R.STEWART	14-NOV-2011
± .02	± .005	± .5°	CHECKED	D.SCHMITT	04-JAN-2012
			APPROVED	M.MCGEE	04-JAN-2012

1. BREAK ALL SHARP EDGES .015 MAX.
2. DO NOT SCALE DRAWING.
3. DIMENSIONS BASED UPON ASME Y14.5M-1994
4. MAX. ALL MACH. SURFACES 63
5. DRAWING UNITS: U.S. INCH

USED ON: ME-433828

MATERIAL: 3/8-16 UNC 316L SS THREADED ROD

FERMI NATIONAL ACCELERATOR LABORATORY
UNITED STATES DEPARTMENT OF ENERGY

NOVA-ANU TARGET HALL MEDIUM ENERGY TARGET HANGER MOUNT THREADED ROD

SCALE	DRAWING NUMBER	SHEET	REV
2:1	8875.112-MB-433864	1 OF 1	A

CREATED WITH : Ideas12NXSeries | GROUP: ACCELERATOR MECH. SUPPT.

A

NOTE: .0002 TUNSTEN DISULFIDE (WS2) COATING AFTER ALL MACHINING