REV	DESCRIPTION	DRAWN	DATE
		APPROVED	DATE

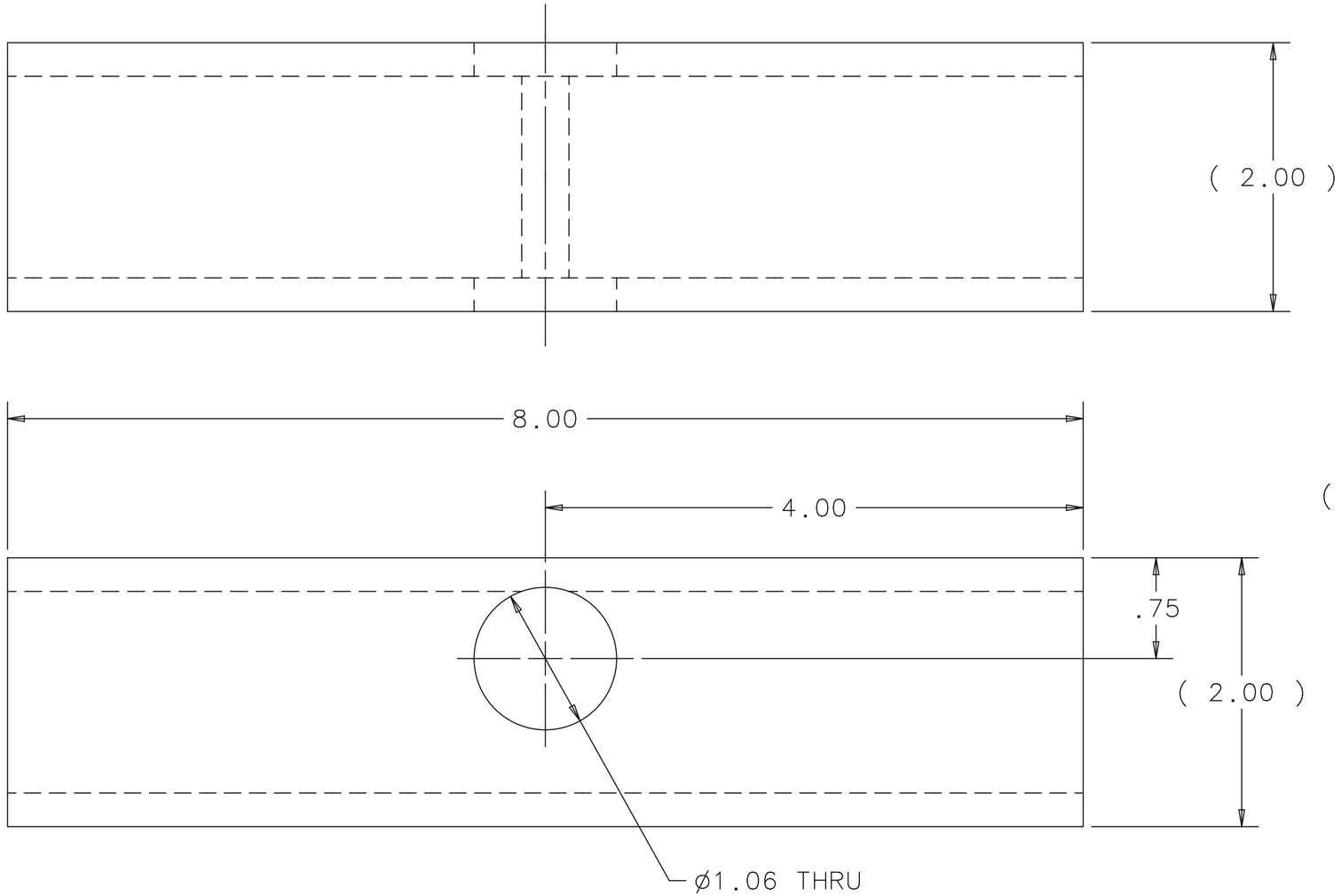

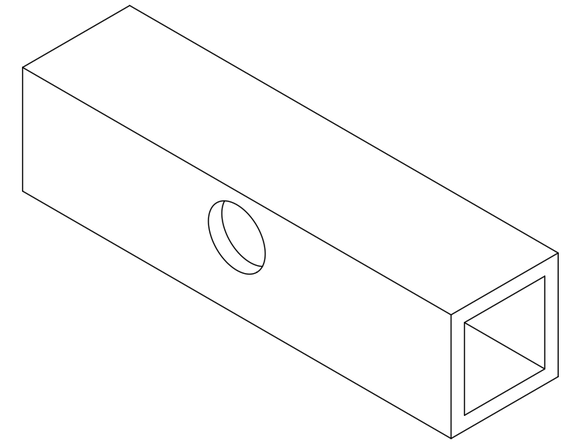

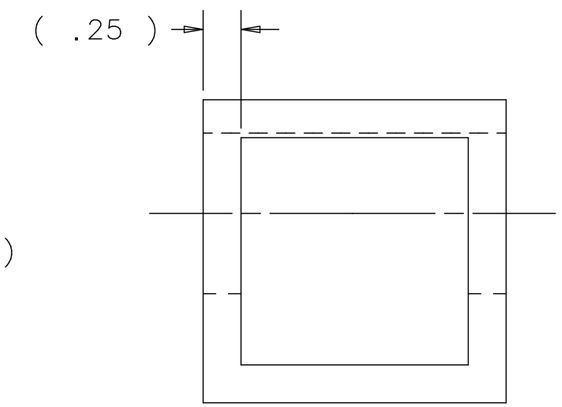

UNLESS OTHERWISE SPECIFIED		
.XX	.XXX	ANGLES
± .01	± .005	± .5°

1. BREAK ALL SHARP EDGES .015 MAX.
2. DO NOT SCALE DRAWING.
3. DIMENSIONS BASED UPON ASME Y14.5M-1994
4. MAX. ALL MACH. SURFACES 63
5. DRAWING UNITS: U.S. INCH

ORIGINATOR	M.MCGEE	19-AUG-2011
DRAWN	R.STEWART	19-AUG-2011
CHECKED	D.SCHMITT	03-JAN-2012
APPROVED	M.MCGEE	03-JAN-2012

USED ON: MC-433825

MATERIAL: 6063-T52 EXTRUDED ALUMINUM SQUARE TUBING 2 X 2 X .25

FERMI NATIONAL ACCELERATOR LABORATORY
UNITED STATES DEPARTMENT OF ENERGY

NUMI TARGET HALL MEDIUM ENERGY TARGET UPSTREAM STAND BASE

SCALE	DRAWING NUMBER	SHEET	REV
1:1	8875.112-MB-433826	1 OF 1	

CREATED WITH : Ideas12NXSeries | GROUP: ACCELERATOR MECH. SUPPT.

Created: 13:36:27 on 21-02-13 (D-M-Y) By: rstewart State: 3-RELEASED