REV	DESCRIPTION	DRAWN / APPROVED	DATE / DATE
A	UPDATED FROM 433819, GUSSETS NOW MACHINED FLUSH WITH CHANNEL	R.STEWART	01-FEB-2012
		M.MCGEE	22-FEB-2012
B	UPDATED FROM 433819	R.STEWART	29-MAR-2012
		M.MCGEE	29-MAR-2012
C	HOLES REMOVED	R.STEWART	29-APR-2013
		M.MCGEE	29-APR-2013

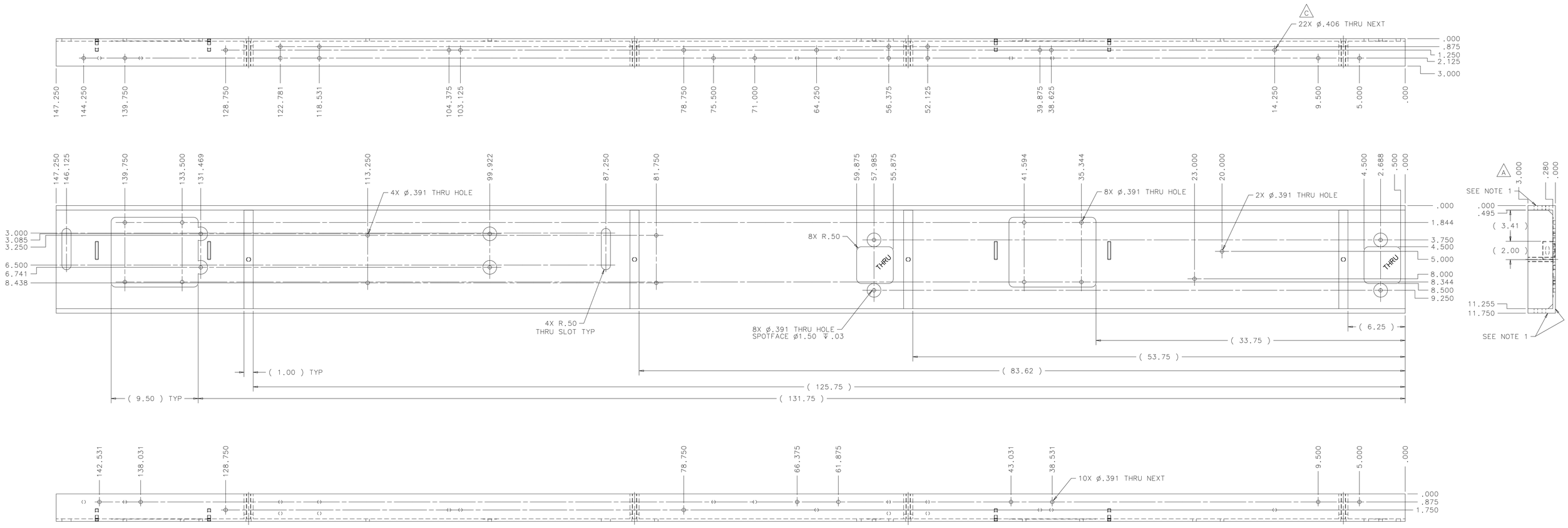

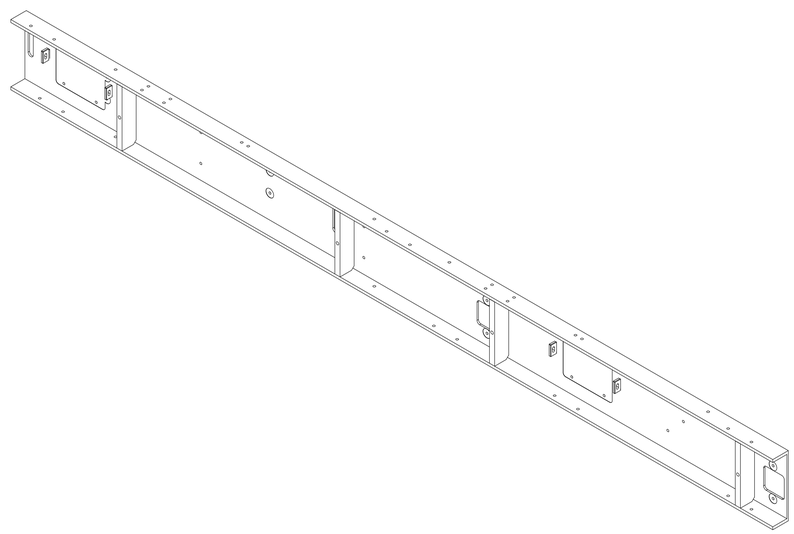

NOTES: 1. MATERIAL TO BE REMOVED FROM OUTSIDE OF CHANNEL ONLY TO MEET THICKNESS.

2. USE 32 SURFACE FINISH AREA FROM DRAWING WELDED LEFT CHANNEL (ME-433819) AS REFERENCE FOR FLATNESS OF CHANNEL TO SET DATUM A.

3. WEIGHT 75 LBS.

UNLESS OTHERWISE SPECIFIED			ORIGINATOR	M.MCGEE	06-OCT-2011
.XX	.XXX	ANGLES	DRAWN	R.STEWART	06-OCT-2011
± .01	± .005	± .5°	CHECKED	D.SCHMITT	03-JAN-2012
			APPROVED	M.MCGEE	03-JAN-2012

1. BREAK ALL SHARP EDGES .015 MAX.
2. DO NOT SCALE DRAWING.
3. DIMENSIONS BASED UPON ASME Y14.5M-1994
4. MAX. ALL MACH. SURFACES 63
5. DRAWING UNITS: U.S. INCH

USED ON: ME-433829

MATERIAL: ME-433819 - WELDED LEFT CHANNEL (6061-T6 ALUMINUM) A

FERMI NATIONAL ACCELERATOR LABORATORY
UNITED STATES DEPARTMENT OF ENERGY

NOVA-ANU TARGET HALL
MEDIUM ENERGY TARGET
LEFT CHANNEL MACHINED

SCALE	DRAWING NUMBER	SHEET	REV
1:4	8875.112-ME-433821	1 OF 1	C

CREATED WITH : Ideas12NXSeries GROUP: ACCELERATOR MECH. SUPPT.