REV	DESCRIPTION	DRAWN	DATE
		APPROVED	DATE
A	5.00 DIMENSION WAS 2.50, AND HOLE DEPTH WAS 1.00	R.STEWART	01-FEB-2012
		M.MCGEE	22-FEB-2012
B	WAS TWO 1/2-13 TAPPED HOLES	R.STEWART	28-MAR-2012
		M.MCGEE	28-MAR-2012

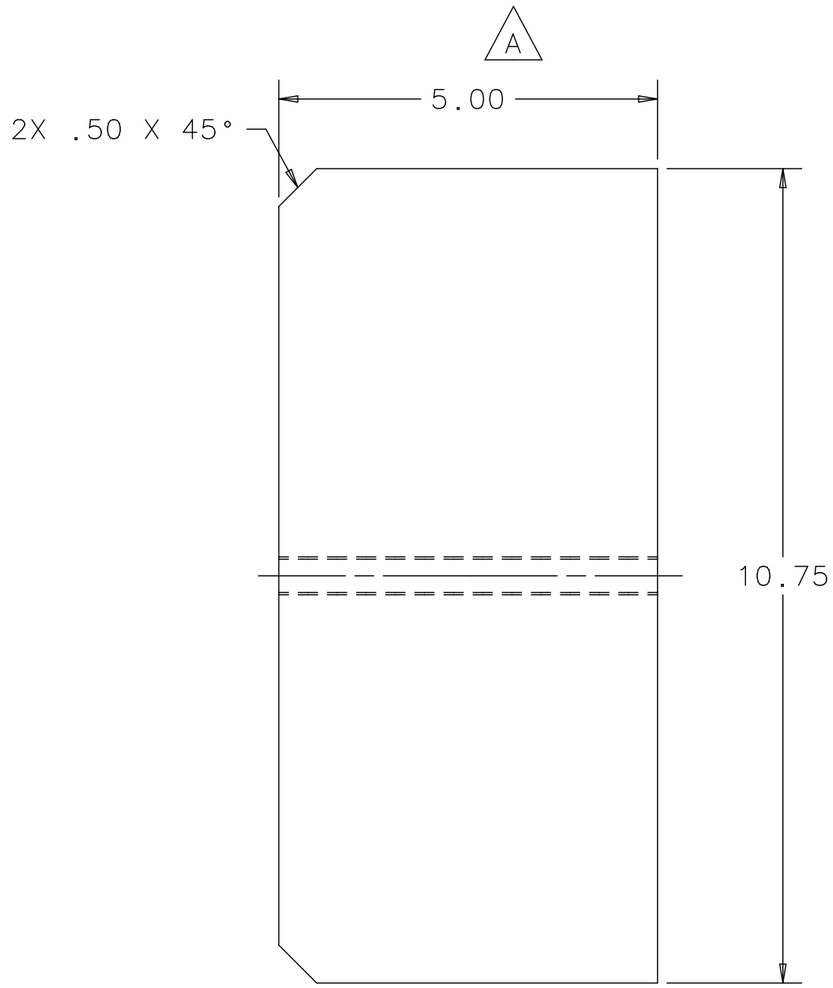

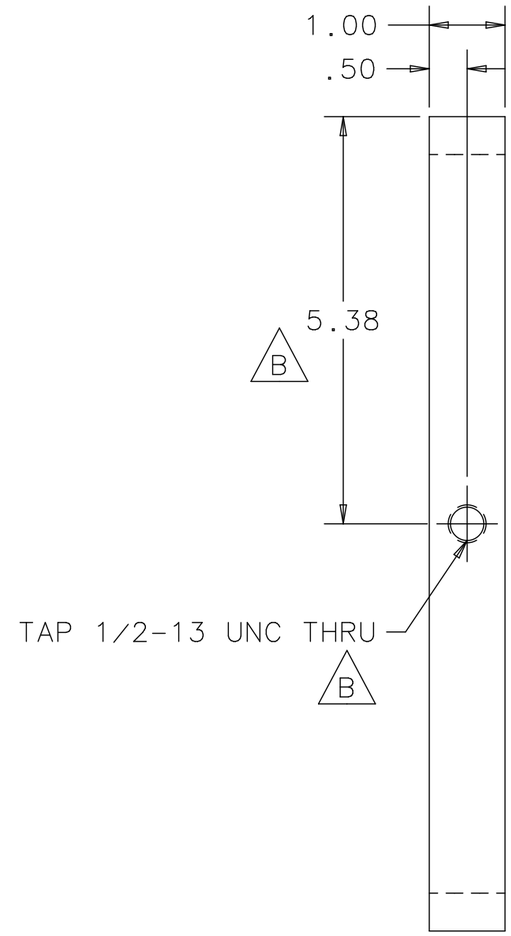

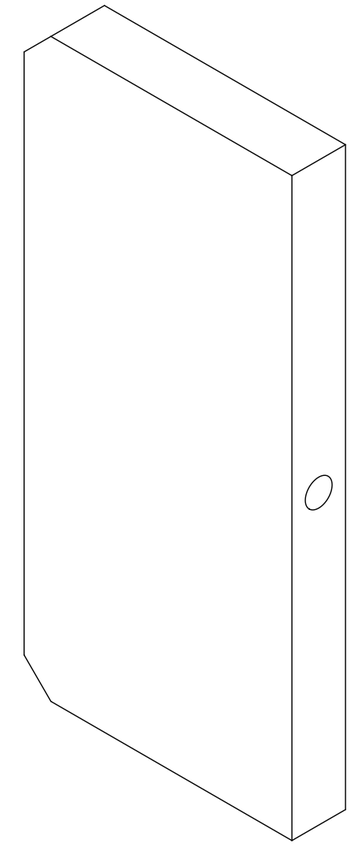

UNLESS OTHERWISE SPECIFIED			ORIGINATOR	M.MCGEE	04-OCT-2011
.XX	.XXX	ANGLES	DRAWN	R.STEWART	04-OCT-2011
± .01	± .005	± .5°	CHECKED	D.SCHMITT	03-JAN-2012
			APPROVED	M.MCGEE	03-JAN-2012

1. BREAK ALL SHARP EDGES .015 MAX.
2. DO NOT SCALE DRAWING.
3. DIMENSIONS BASED UPON ASME Y14.5M-1994
4. MAX. ALL MACH. SURFACES 63
5. DRAWING UNITS: U.S. INCH

USED ON: ME-433818 - ME-433819

MATERIAL: 6061-T6 ALUMINUM

FERMI NATIONAL ACCELERATOR LABORATORY
UNITED STATES DEPARTMENT OF ENERGY

NOVA-ANU TARGET HALL MEDIUM ENERGY TARGET CHANNEL GUSSET

SCALE	DRAWING NUMBER	SHEET	REV
1:2	8875.112-MB-433816	1 OF 1	B

CREATED WITH : Ideas12NXSeries | GROUP: ACCELERATOR MECH. SUPPT.

Created: 13:32:32 on 21-02-13 (D-M-Y) By: rstewart State: 3-RELEASED