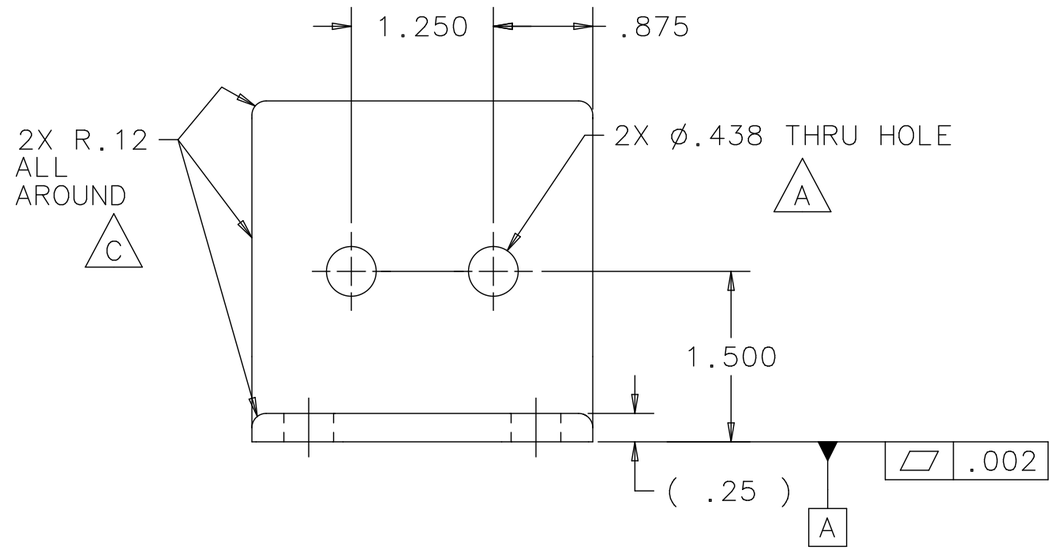

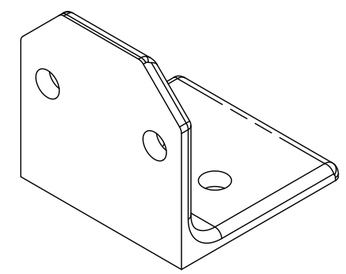

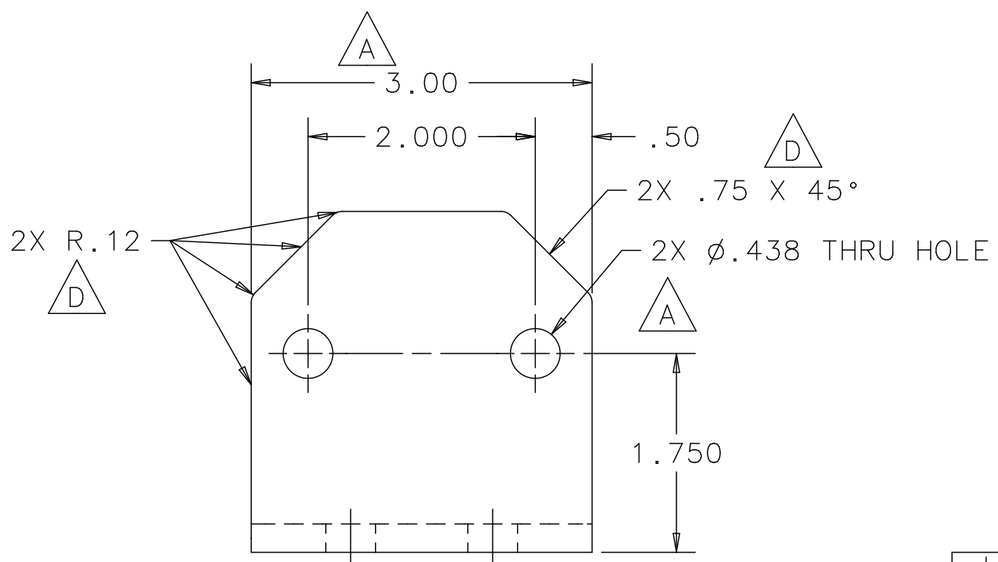

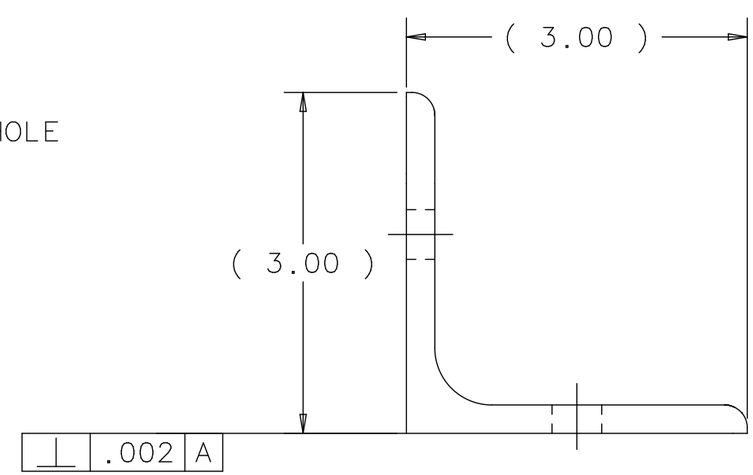

REV	DESCRIPTION	DRAWN / APPROVED	DATE / DATE
A	HOLES WAS ø.406 AND ø.281, LENGTH ADDED, AND USED ON ADDED	R.STEWART	15-JUL-2011
		M.MCGEE	03-JAN-2012
B	4X .75 CHAMFERS ADDED, AND .50 FILLETS	R.STEWART	11-MAY-2012
		M.MCGEE	11-MAY-2012
C	2X .75 CHAMFERS REMOVED, AND .50 FILLET ALL AROUND ADDED	R.STEWART	06-JUN-2012
		M.MCGEE	06-JUN-2012
D	MODEL FIXED	R.STEWART	06-JUN-2012
		M.MCGEE	06-JUN-2012

UNLESS OTHERWISE SPECIFIED					
.XX	.XXX	ANGLES	ORIGINATOR	M.MCGEE	23-SEP-2010
± .01	± .005	± .5°	DRAWN	R.STEWART	23-SEP-2010
			CHECKED	M.MCGEE	11-NOV-2010
			APPROVED	M.MARTENS	11-NOV-2010

1. BREAK ALL SHARP EDGES .015 MAX.
2. DO NOT SCALE DRAWING.
3. DIMENSIONS BASED UPON ASME Y14.5M-1994
4. MAX. ALL MACH. SURFACES 63
5. DRAWING UNITS: U.S. INCH

USED ON A: ME-433624 - ME-433829

MATERIAL: 6061-T6 ALUMINUM 3 X 3 X 1/4 WALL ANGLE

FERMI NATIONAL ACCELERATOR LABORATORY
UNITED STATES DEPARTMENT OF ENERGY

NOVA - ANU MEDIUM ENERGY TARGET BAFFLE LIFTING PLATE ANGLE

SCALE	DRAWING NUMBER	SHEET	REV
3/4	8875.116-MB-433631	1 OF 1	D

CREATED WITH : Ideas12NXSeries | GROUP: ACCELERATOR MECH. SUPPT.

Created: 13:31:13 on 21-02-13 (D-M-Y) By: rstewart State: 3-RELEASED