REV	DESCRIPTION	DRAWN / APPROVED	DATE / DATE
A	9.38 DIM WAS 11.00, 8.88 DIM WAS 10.50, 11.25 DIM WAS 8.00 AND USED ON ADDED	R.STEWART	23-MAY-2011
		M.MCGEE	23-MAY-2011
B	TWO HOLES FOR TIME-SERTS ADDED	R.STEWART	29-APR-2013
		M.MCGEE	29-APR-2013

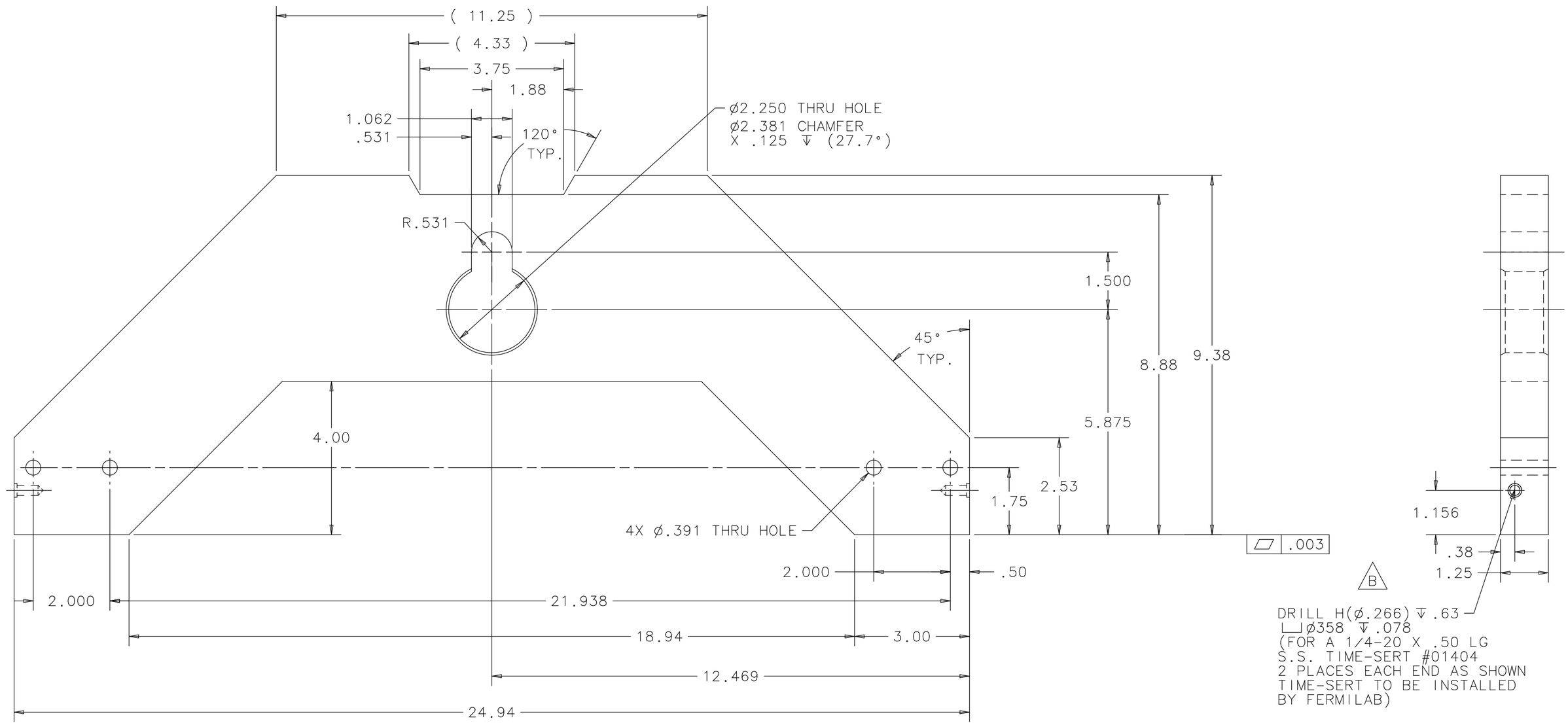

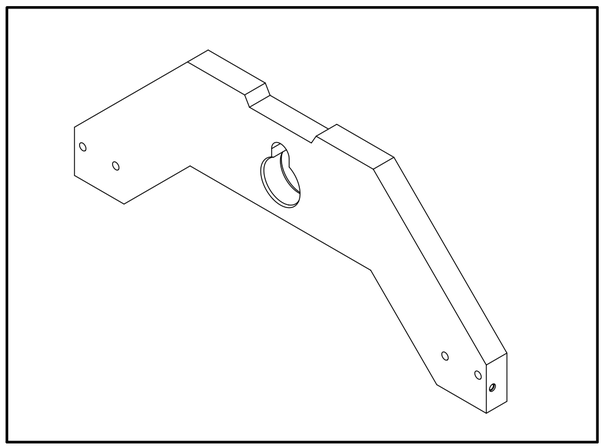

UNLESS OTHERWISE SPECIFIED					
.XX	.XXX	ANGLES	ORIGINATOR	M.MCGEE	23-SEP-2010
± .01	± .005	± .5°	DRAWN	R.STEWART	23-SEP-2010
			CHECKED	M.MCGEE	11-NOV-2010
			APPROVED	M.MARTENS	11-NOV-2010

1. BREAK ALL SHARP EDGES .015 MAX.
2. DO NOT SCALE DRAWING.
3. DIMENSIONS BASED UPON ASME Y14.5M-1994
4. MAX. ALL MACH. SURFACES 63
5. DRAWING UNITS: U.S. INCH

USED ON A: ME-433624 - ME-433829

MATERIAL: 6061-T6 ALUMINUM

FERMI NATIONAL ACCELERATOR LABORATORY
UNITED STATES DEPARTMENT OF ENERGY

NOVA - ANU MEDIUM ENERGY TARGET BAFFLE LIFTING PLATE

SCALE	DRAWING NUMBER	SHEET	REV
1:2	8875.116-MC-433630	1 OF 1	B

CREATED WITH : Ideas12NXSeries | GROUP: ACCELERATOR MECH. SUPPT.

Created: 11:12:11 on 02-05-13 (D-M-Y) By: rstewart State: 1-INITIAL