| REV | DESCRIPTION | DRAWN | DATE |
|---|---|---|---|
| | | APPROVED | DATE |

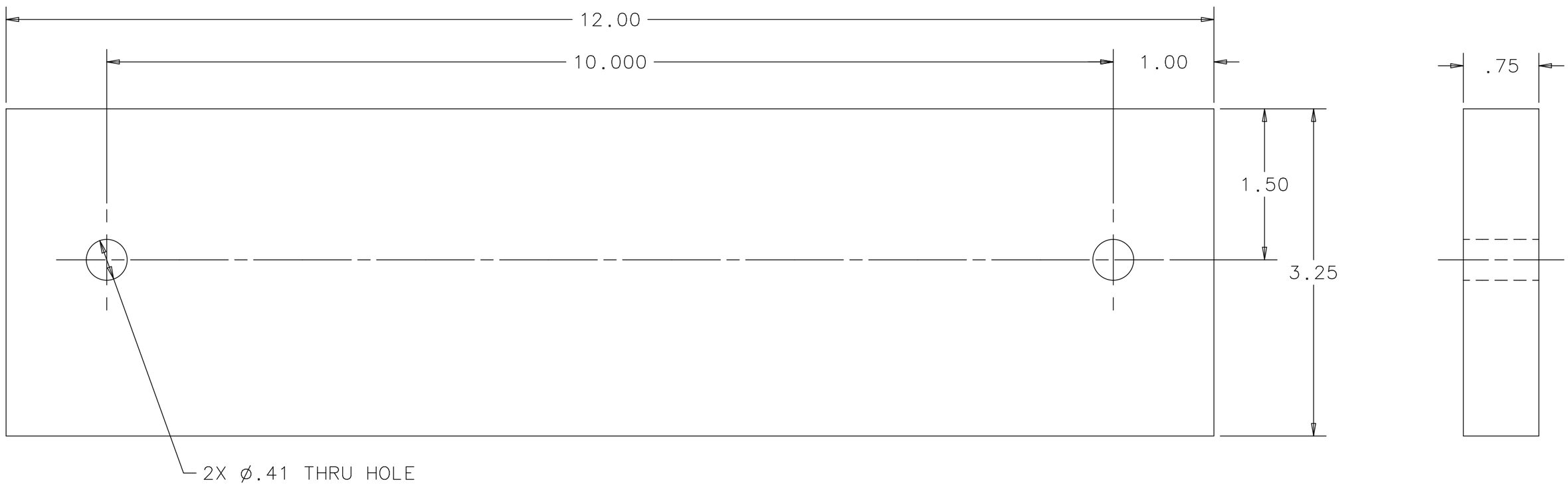


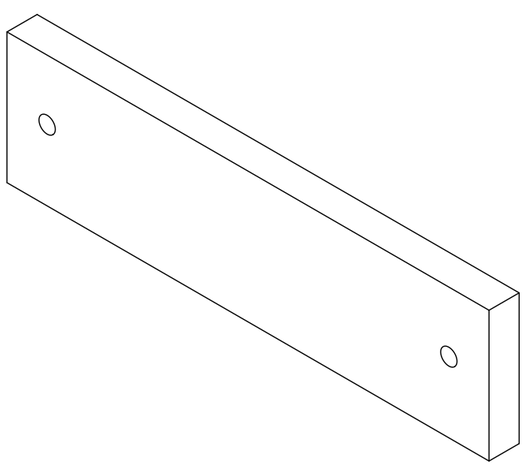

| UNLESS OTHERWISE SPECIFIED | | | ORIGINATOR | M.MCGEE | 28-SEP-2010 |
|---|---|---|---|---|---|
| .XX | .XXX | ANGLES | DRAWN | M.KIELAR | 28-SEP-2010 |
| ± .01 | ± .005 | ± .5° | CHECKED | M.MCGEE | 10-NOV-2010 |
| | | | APPROVED | M.MARTENS | 10-NOV-2010 |

1. BREAK ALL SHARP EDGES .015 MAX.
2. DO NOT SCALE DRAWING.
3. DIMENSIONS BASED UPON ASME Y14.5M-1994
4. MAX. ALL MACH. SURFACES 63
5. DRAWING UNITS: U.S. INCH

USED ON: MC-433602

MATERIAL: 6061-T6 ALUMINUM

FERMI NATIONAL ACCELERATOR LABORATORY
UNITED STATES DEPARTMENT OF ENERGY

# NUMI TARGET HALL
# MEDIUM ENERGY TARGET BAFFLE
# UPSTREAM STAND MOUNTING PLATE

| SCALE | DRAWING NUMBER | SHEET | REV |
|---|---|---|---|
| 1:1 | 8875.112-MB-433604 | 1 OF 1 | |

CREATED WITH : Ideas12NXSeries | GROUP: ACCELERATOR MECH. SUPPT.

Created: 13:30:13 on 21-02-13 (D-M-Y) By: rstewart State: 3-RELEASED