REV	DESCRIPTION	DRAWN	DATE
		APPROVED	DATE
A	SLOT (DETAIL A) CHANGED, TWO ø.391 HOLES ADDED, AND USED ON ADDED	R.STEWART	13-APR-2011
		M.MCGEE	14-APR-2011

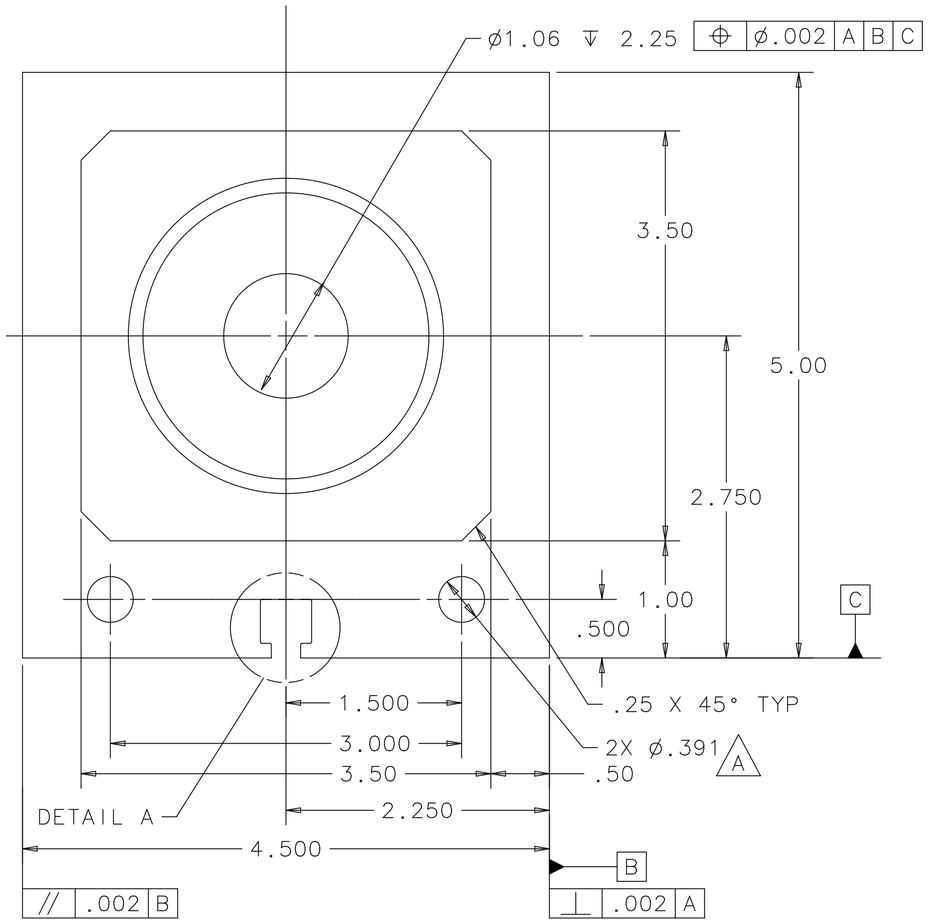

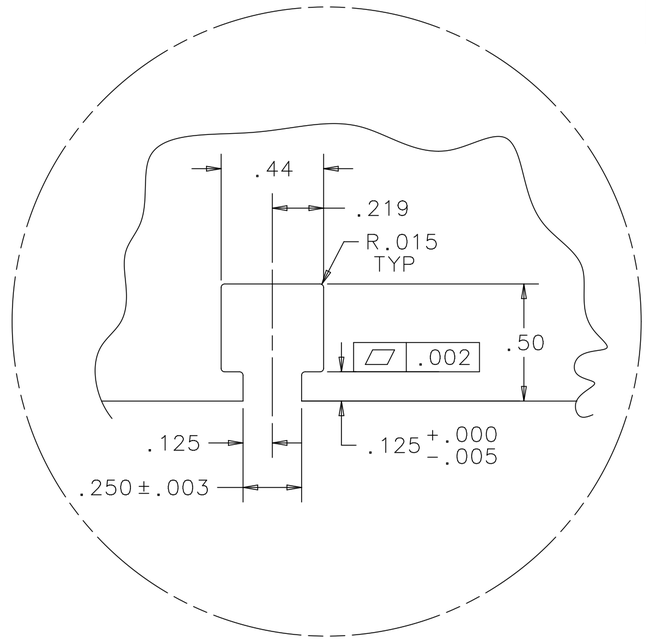

DETAIL A
SCALE 2:1 A

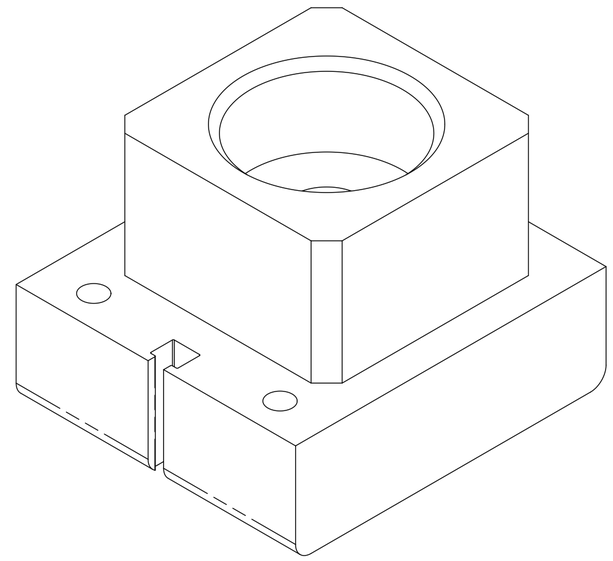

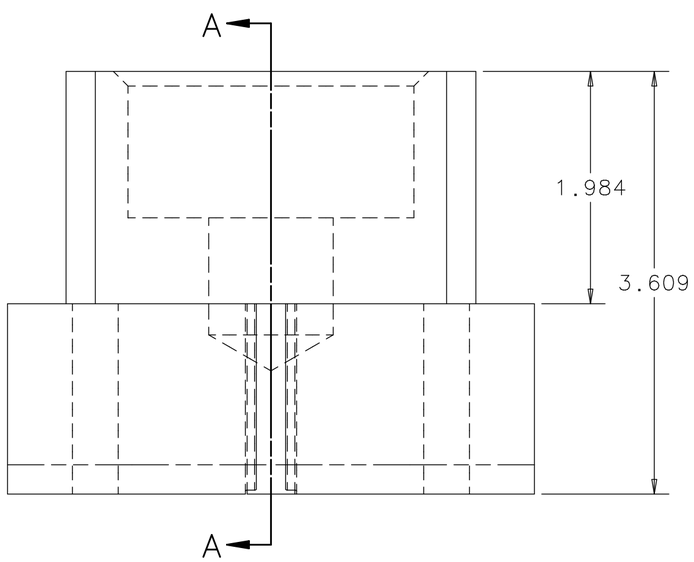

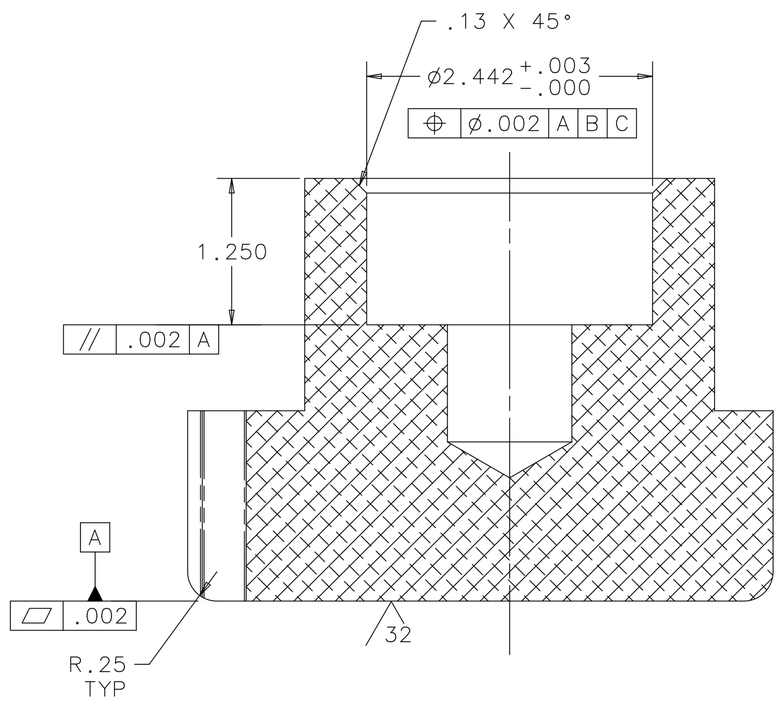

SECTION A-A
SCALE 1:1

UNLESS OTHERWISE SPECIFIED			ORIGINATOR	M.MCGEE	27-SEP-2010
.XX	.XXX	ANGLES	DRAWN	R.STEWART	27-SEP-2010
± .01	± .005	± .5°	CHECKED	M.MCGEE	10-NOV-2010
			APPROVED	M.MARTENS	10-NOV-2010

1. BREAK ALL SHARP EDGES .015 MAX.
2. DO NOT SCALE DRAWING.
3. DIMENSIONS BASED UPON ASME Y14.5M-1994
4. MAX. ALL MACH. SURFACES 63
5. DRAWING UNITS: U.S. INCH

USED ON A: MC-433582 - MC-433828

MATERIAL: 6061-T6 ALUMINUM

FERMI NATIONAL ACCELERATOR LABORATORY
UNITED STATES DEPARTMENT OF ENERGY

NOVA-ANU TARGET HALL MEDIUM ENERGY TARGET BAFFLE HANGER MOUNT SLIDE PLATE

SCALE	DRAWING NUMBER	SHEET	REV
1:1	8875.112-MC-433600	1 OF 1	A

CREATED WITH : Ideas12NXSeries | GROUP: ACCELERATOR MECH. SUPPT.