REV	DESCRIPTION	DRAWN / APPROVED	DATE / DATE
A	ITEM 1 UPDATED	R.STEWART	07-NOV-2011
	HOLE CHANGED	M.MCGEE	28-DEC-2011
B	ADDED NOTE 1	DGH	05-OCT-2012
		M.MCGEE	05-OCT-2012
C	ITEM 1 UPDATED, LIMIT DIMENSION ADDED	R.STEWART	29-APR-2013
		M.MCGEE	29-APR-2013

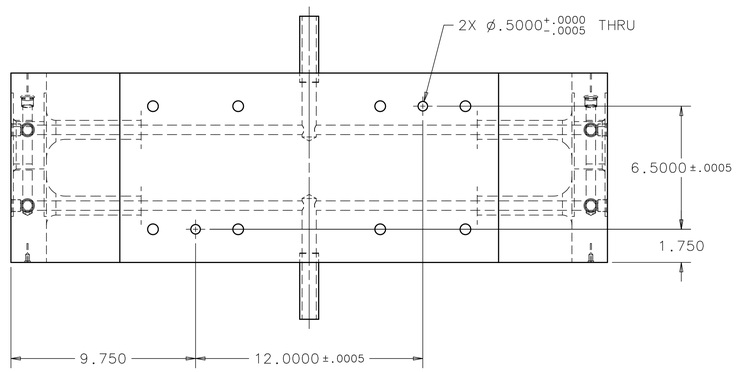

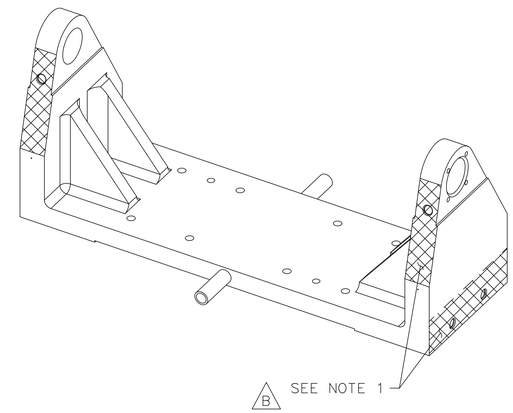

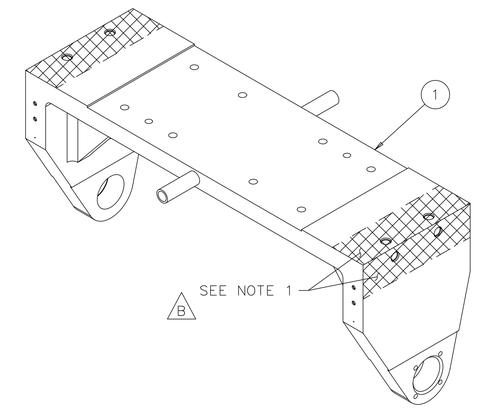

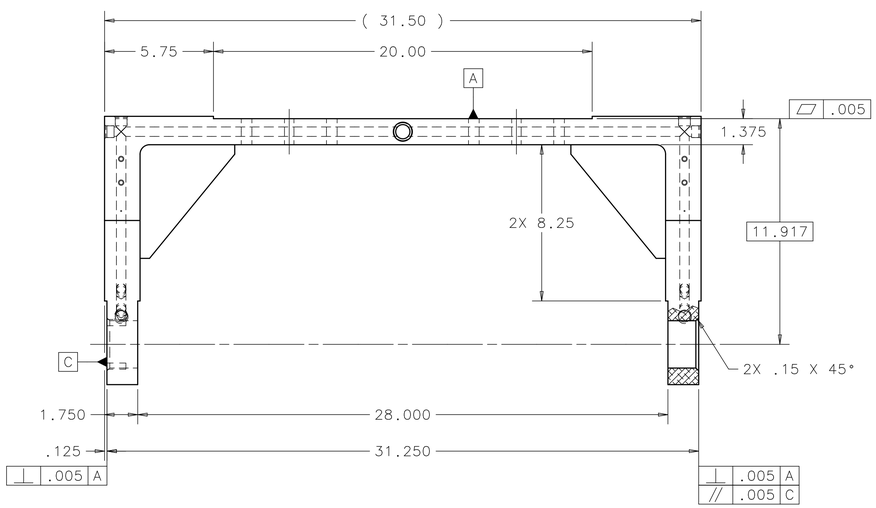

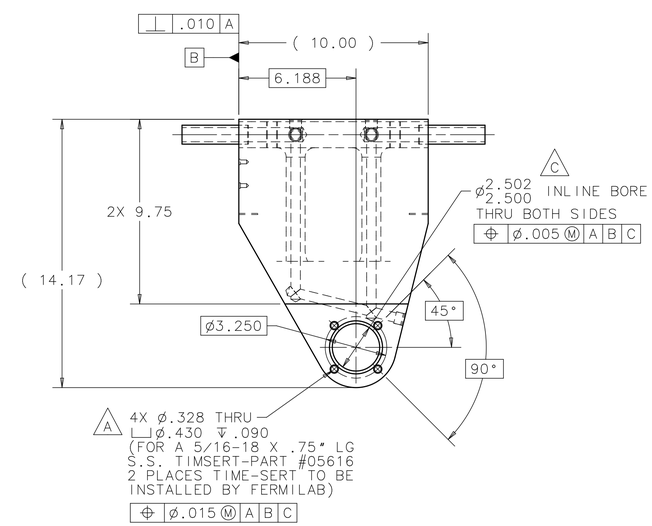

APPROXIMATE WEIGHT: 81 LBS

ITEM	PART NO.	DESCRIPTION OR SIZE	QTY.
1	MC-433575	D.S. FRAME HANGER - WELDMENT	1

PARTS LIST

UNLESS OTHERWISE SPECIFIED			ORIGINATOR	M.MCGEE	11-MAR-2010
.XX	.XXX	ANGLES	DRAWN	D.HURD	23-SEP-2010
± .03	± .005	± 1°	CHECKED	M.MCGEE	14-OCT-2010
			APPROVED	M.MARTENS	15-OCT-2010
			USED ON	MD-433577	
			MATERIAL	SEE PARTS LIST	

1. BREAK ALL SHARP EDGES .015 MAX.
2. DO NOT SCALE DRAWING.
3. DIMENSIONS BASED UPON ASME Y14.5M-1994
4. MAX. ALL MACH. SURFACES 125
5. DRAWING UNITS: U.S. INCH

FERMI NATIONAL ACCELERATOR LABORATORY
UNITED STATES DEPARTMENT OF ENERGY

NOVA-ANU TARGET HALL
MEDIUM ENERGY TARGET
D.S FRAME HANGER - FINAL MACHINE

SCALE	DRAWING NUMBER	SHEET	REV
1/4	8875.112-MD-433576	1 OF 1	C

CREATED WITH : Ideas12NXSeries | GROUP: ACCELERATOR MECH. SUPPT.

NOTES:

B 1. DO NOT MACHINE PLUG WELDS OR SURFACES AROUND PLUG WELDS. THESE AREAS CAN BE FOUND IN THE CROSS-HATCHED REGIONS IN THE ISOMETRIC VIEWS.