REV	DESCRIPTION	DRAWN / APPROVED	DATE / DATE
A	ITEM 3 UPDATED, AND ITEM 17 REMOVED	R.STEWART	31-JUL-2012
		M.MCGEE	31-JUL-2012
B	ITEM 6 CHANGED	R.STEWART	05-FEB-2013
		M.MCGEE	05-FEB-2013
C	MODEL UPDATED	R.STEWART	13-JUN-2013
		M.MCGEE	13-JUN-2013

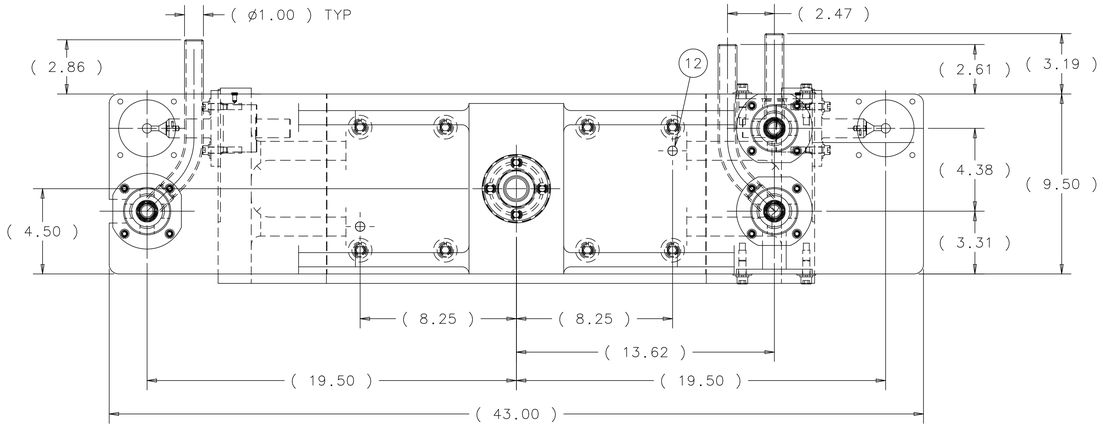

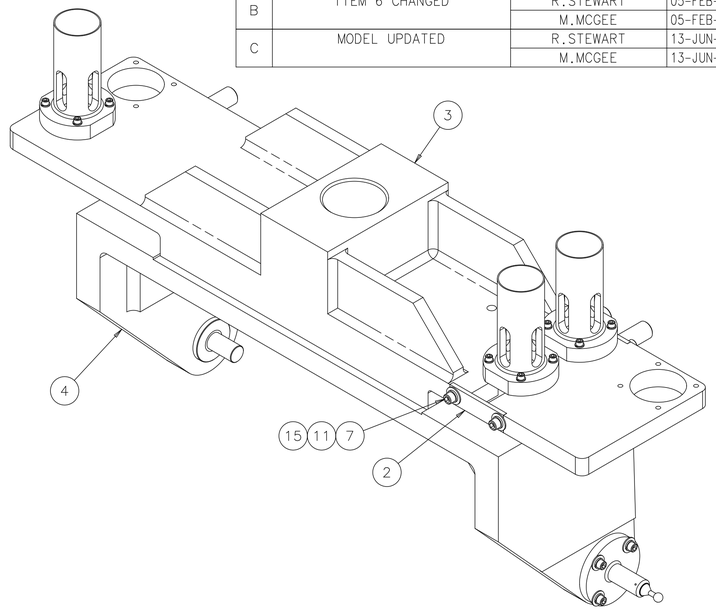

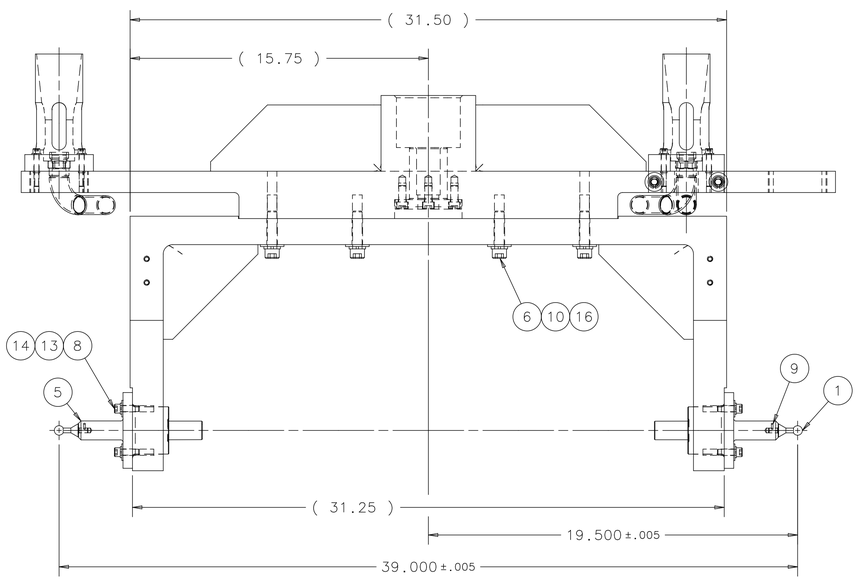

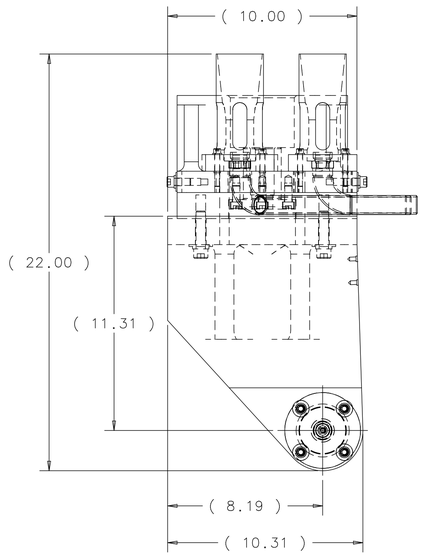

ITEM	PART NO.	DESCRIPTION OR SIZE	QTY.
~~17~~	~~SWAGELOK~~	~~TUBE FITTING, MALE CONNECTOR 1" X 1" WELD 316L PART NO. SS-1610-1-16W~~	~~3~~
16	MCMASTER-CARR PN 91950A033 OR EQ	1/2" FLAT WASHER, 316 SS	8
15	MCMASTER-CARR PN 91950A031 OR EQ	3/8" FLAT WASHER, 316 SS	4
14	MCMASTER-CARR PN 91950A030 OR EQ	5/16" FLAT WASHER, 316 SS	8
13		5/16" SERRATED SAFETY WASHER, SS	8
12	MCMASTER-CARR PN 90145A720 OR EQ	DOWEL PIN 1/2" X 2.00" LG., SS	2
11	SCHNORR S 10 SS	3/8" SERRATED SAFETY WASHER, SS	4
10	SCHNORR S 12.7 SS	1/2" SERRATED SAFETY WASHER, SS	8
9	MCMASTER-CARR PN 92313A106 OR EQ	SET SCREW #4-40 UNC X .25" LG., 316 SS	2
8	MCMASTER-CARR PN 92185A585 OR EQ	SHCS 5/16-18 UNC X 1.25" LG., 316 SS	8
7	MCMASTER-CARR PN 92185A542 OR EQ	SHCS 3/8-16 UNC X 1.00" LG., 316 SS	4
6	MCMASTER-CARR PN 92185A722 OR EQ	SHCS 1/2-13 UNC X 2.50" LG., 316 SS	8
5	MC-433578	FRAME HANGER PIVOT STUD	2
4	MD-433564	UPSTREAM FRAME HANGER	1
3	MD-433563	UPSTREAM HANGER SUPPORT ASSEMBLY	1
2	MB-433320	SIDE COVER PLATE	2
1	MB-433656	FRAME HANGER TOOLING BALL	2

PARTS LIST

UNLESS OTHERWISE SPECIFIED					
.XX	.XXX	ANGLES	ORIGINATOR	M.MCGEE	08-JUN-2012
± .03	± .005	± 1°	DRAWN	R.STEWART	08-JUN-2012
			CHECKED	M.MCGEE	08-JUN-2012
			APPROVED	M.MCGEE	08-JUN-2012

1. BREAK ALL SHARP EDGES .015 MAX.
2. DO NOT SCALE DRAWING.
3. DIMENSIONS BASED UPON ASME Y14.5M-1994
4. MAX. ALL MACH. SURFACES 125
5. DRAWING UNITS: U.S. INCH

USED ON: ME-433843

MATERIAL: SEE PARTS LIST ABOVE

FERMI NATIONAL ACCELERATOR LABORATORY
UNITED STATES DEPARTMENT OF ENERGY

NOVA-ANU TARGET HALL
MEDIUM ENERGY TARGET
UPSTREAM FRAME HANGER ASSEMBLY

SCALE	DRAWING NUMBER	SHEET	REV
1:4	8875.112-MD-433565	1 OF 1	C

CREATED WITH : Ideas12NXSeries | GROUP: ACCELERATOR MECH. SUPPT.