REV	DESCRIPTION	DRAWN / APPROVED	DATE / DATE
A	ITEM 13 REMOVED	R.STEWART	17-AUG-2012
		M.MCGEE	17-AUG-2012
B	ITEM 5 CHANGED	R.STEWART	05-FEB-2013
		M.MCGEE	05-FEB-2013
C	MODEL UPDATED	R.STEWART	13-JUN-2013
		M.MCGEE	12-AUG-2013

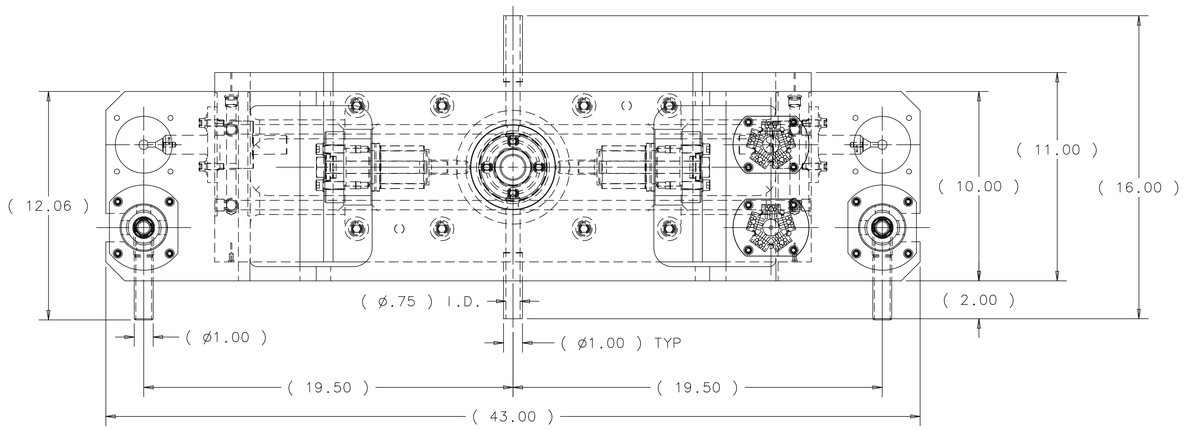

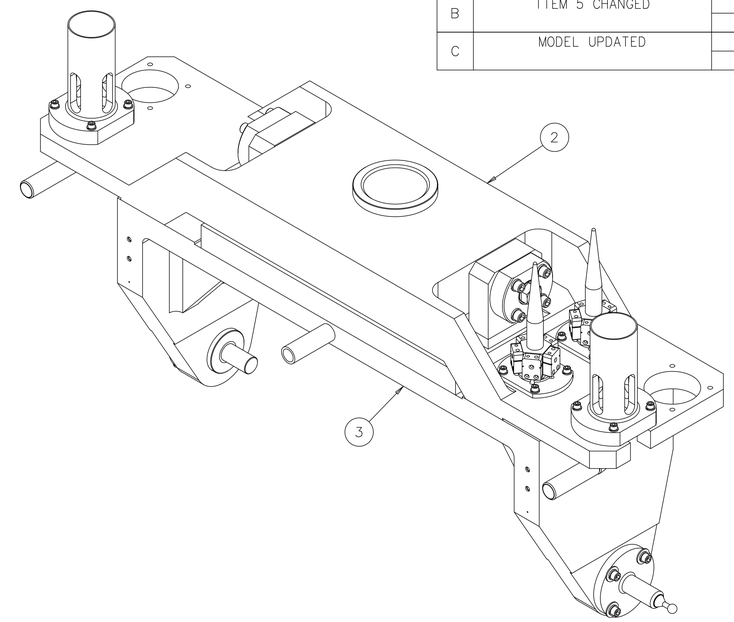

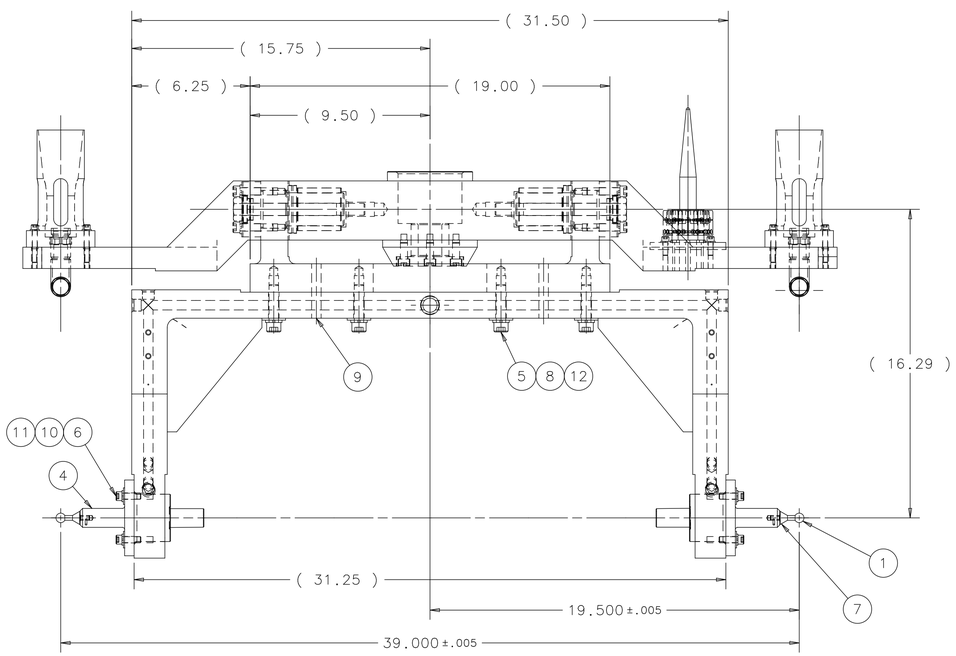

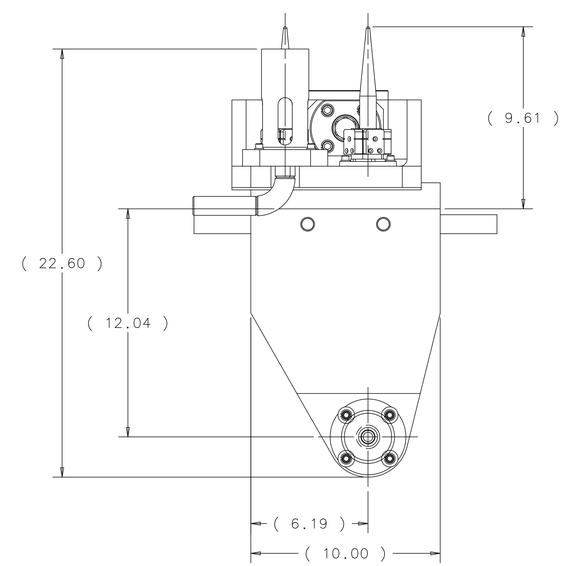

ITEM	PART NO.	DESCRIPTION OR SIZE	QTY.
12	MCMASTER-CARR PN 91950A033 OR EQ	1/2" FLAT WASHER, 316 SS	8
11	MCMASTER-CARR PN 91950A030 OR EQ	5/16" FLAT WASHER, 316 SS	8
10	SCHNORR S 8 SS	5/16" SERRATED SAFETY WASHER, SS	8
9	MCMASTER-CARR PN 90145A720 OR EQ	DOWEL PIN 1/2" X 2.00" LG., SS	2
8	SCHNORR S 12.7 SS	1/2" SERRATED SAFETY WASHER, SS	8
7	MCMASTER-CARR PN 92313A106 OR EQ	SET SCREW #4-40 UNC X .25" LG., 316 SS	2
6	MCMASTER-CARR PN 92185A585 OR EQ	SHCS 5/16-18 UNC X 1.25" LG., 316 SS	8
B 5	MCMASTER-CARR PN 92185A722 OR EQ	SHCS 1/2-13 UNC X 2.50" LG., 316 SS	8
4	MC-433578	FRAME HANGER PIVOT STUD	2
3	MD-433576	D.S. FRAME HANGER - FINAL MACHINE	1
2	MD-433571	DOWNSTREAM PIVOT ASSEMBLY	1
1	MB-433656	FRAME HANGER TOOLING BALL	2

PARTS LIST

UNLESS OTHERWISE SPECIFIED			ORIGINATOR	M.MCGEE	11-MAR-2010
.XX	.XXX	ANGLES	DRAWN	D.HURD	24-SEP-2010
± .03	± .005	± 1°	CHECKED	M.MCGEE	07-JUN-2012
			APPROVED	M.MCGEE	07-JUN-2012

1. BREAK ALL SHARP EDGES .015 MAX.
2. DO NOT SCALE DRAWING.
3. DIMENSIONS BASED UPON ASME Y14.5M-1994
4. MAX. ALL MACH. SURFACES 125
5. DRAWING UNITS: U.S. INCH

USED ON: ME-433843

MATERIAL: SEE PARTS LIST

FERMI NATIONAL ACCELERATOR LABORATORY
UNITED STATES DEPARTMENT OF ENERGY

NOVA-ANU TARGET HALL
MEDIUM ENERGY TARGET
DOWNSTREAM FRAME HANGER ASSEMBLY

SCALE	DRAWING NUMBER	SHEET	REV
1/4	8875.000-MD-433577	1 OF 1	C

CREATED WITH : Ideas12NXSeries | GROUP: ACCELERATOR MECH. SUPPT.