REV	DESCRIPTION	DRAWN	DATE
		APPROVED	DATE

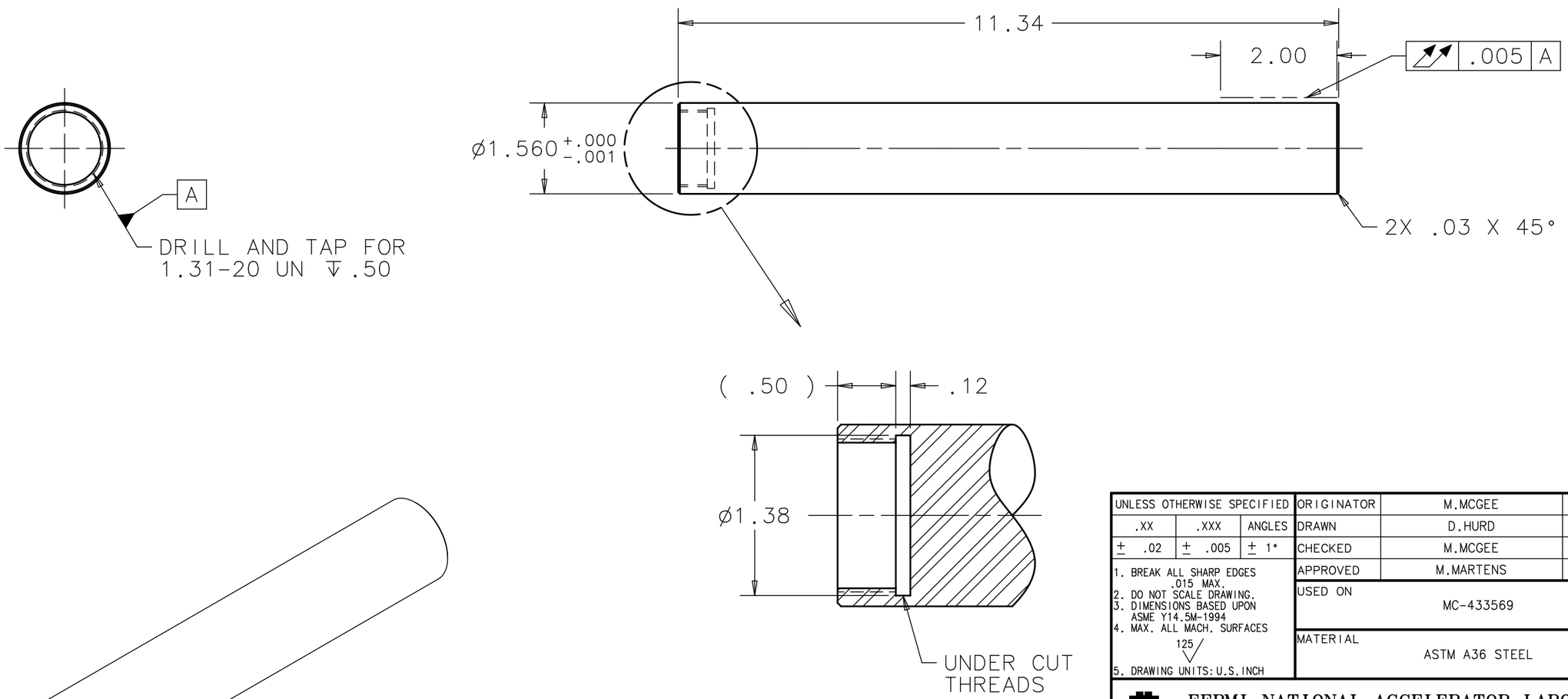

UNLESS OTHERWISE SPECIFIED			ORIGINATOR	M.MCGEE	11-MAR-2010
.XX	.XXX	ANGLES	DRAWN	D.HURD	06-OCT-2010
± .02	± .005	± 1°	CHECKED	M.MCGEE	14-OCT-2010
			APPROVED	M.MARTENS	15-OCT-2010

1. BREAK ALL SHARP EDGES .015 MAX.
2. DO NOT SCALE DRAWING.
3. DIMENSIONS BASED UPON ASME Y14.5M-1994
4. MAX. ALL MACH. SURFACES 125
5. DRAWING UNITS: U.S. INCH

USED ON: MC-433569

MATERIAL: ASTM A36 STEEL

FERMI NATIONAL ACCELERATOR LABORATORY
UNITED STATES DEPARTMENT OF ENERGY

NOVA-ANU TARGET HALL
MEDIUM ENERGY TARGET BAFFLE
DS REMOTE CONN.-CHECKING MANDREL

SCALE	DRAWING NUMBER	SHEET	REV
1/2	8875.112-MB-433628	1 OF 1	

CREATED WITH : Ideas12NXSeries | GROUP: ACCELERATOR MECH. SUPPT.

Created: 15:08:31 on 21-02-13 (D-M-Y) By: rstewart State: 3-RELEASED