REV	DESCRIPTION	DRAWN	DATE
		APPROVED	DATE
A	3.50 DIMENSION WAS 1.31	R.STEWART	31-JUL-2012
		M.MCGEE	31-JUL-2012

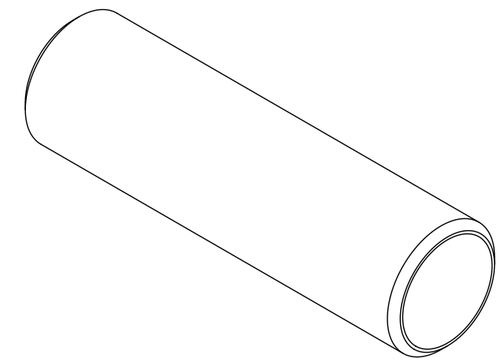

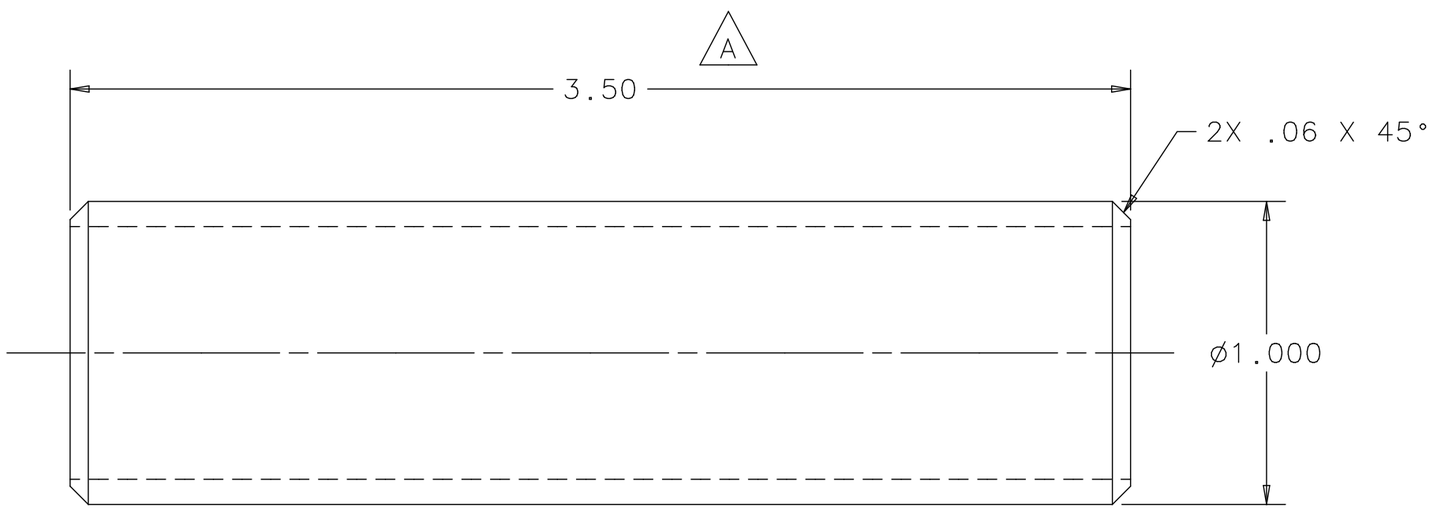

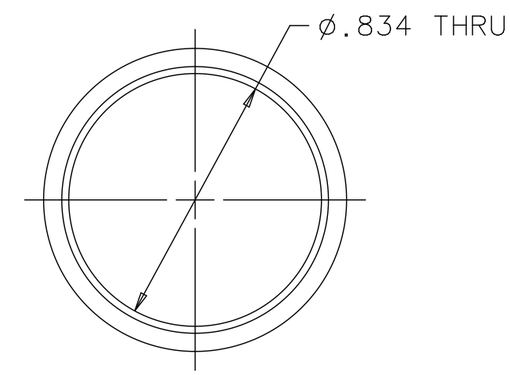

UNLESS OTHERWISE SPECIFIED			ORIGINATOR	M.MCGEE	10-FEB-2012
.XX	.XXX	ANGLES	DRAWN	R.STEWART	10-FEB-2012
± .01	± .005	± .5°	CHECKED	M.MCGEE	07-JUN-2012
			APPROVED	M.MCGEE	07-JUN-2012

1. BREAK ALL SHARP EDGES .015 MAX.
2. DO NOT SCALE DRAWING.
3. DIMENSIONS BASED UPON ASME Y14.5M-1994
4. MAX. ALL MACH. SURFACES 63
5. DRAWING UNITS: U.S. INCH

USED ON: MC-433560

MATERIAL: 316L SS SEAMLESS TUBING 1" OD .083" WALL SWAGELOK P/N SS-T16-S-083

FERMI NATIONAL ACCELERATOR LABORATORY
UNITED STATES DEPARTMENT OF ENERGY

NOVA-ANU TARGET HALL
MEDIUM ENERGY TARGET
US REMOTE CONNECTOR STRAIGHT

SCALE	DRAWING NUMBER	SHEET	REV
2:1	8875.112-MB-433877	1 OF 1	A

CREATED WITH : Ideas12NXSeries | GROUP: ACCELERATOR MECH. SUPPT.