| REV | DESCRIPTION | DRAWN | DATE |
|---|---|---|---|
| | | APPROVED | DATE |
| A | SHORTENED LENGTH OF TUBE | DGH | 26-APR-2013 |
| | | M.MCGEE | 03-MAY-2013 |

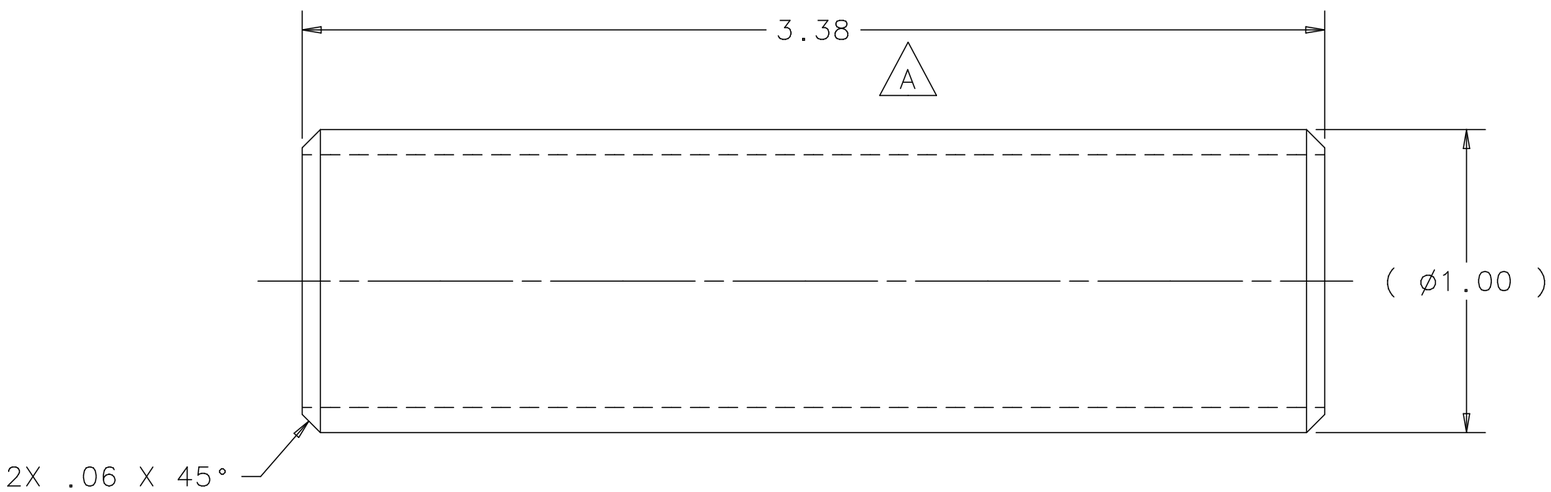


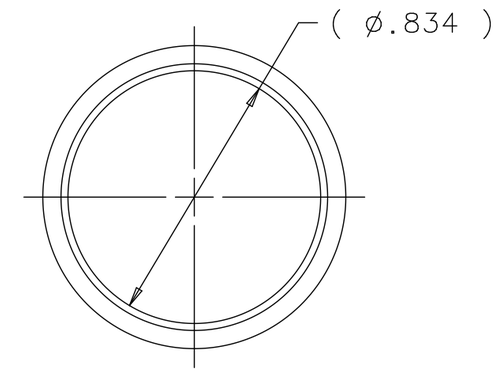


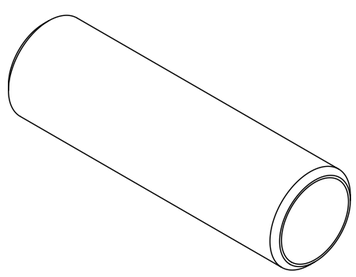

| UNLESS OTHERWISE SPECIFIED | | | ORIGINATOR | M.MCGEE | 10-FEB-2012 |
|---|---|---|---|---|---|
| .XX | .XXX | ANGLES | DRAWN | R.STEWART | 10-FEB-2012 |
| ± .01 | ± .005 | ± .5° | CHECKED | M.MCGEE | 07-JUN-2012 |
| | | | APPROVED | M.MCGEE | 07-JUN-2012 |

1. BREAK ALL SHARP EDGES .015 MAX.
2. DO NOT SCALE DRAWING.
3. DIMENSIONS BASED UPON ASME Y14.5M-1994
4. MAX. ALL MACH. SURFACES 63
5. DRAWING UNITS: U.S. INCH

USED ON: MC-433570

MATERIAL: 316L SS SEAMLESS TUBING 1" OD .083" WALL SWAGELOK P/N SS-T16-S-083

FERMI NATIONAL ACCELERATOR LABORATORY
UNITED STATES DEPARTMENT OF ENERGY

# NOVA-ANU TARGET HALL
# MEDIUM ENERGY TARGET
# DS REMOTE CONNECTOR STRAIGHT

| SCALE | DRAWING NUMBER | SHEET | REV |
|---|---|---|---|
| 2:1 | 8875.112-MB-433876 | 1 OF 1 | A |

CREATED WITH : Ideas12NXSeries | GROUP: ACCELERATOR MECH. SUPPT.

Created: 14:19:38 on 03-05-13 (D-M-Y) By: hurd State: 1-INITIAL