REV	DESCRIPTION	DRAWN	DATE
		APPROVED	DATE
A	5.00 DIMENSION WAS 4.17	R.STEWART	31-JUL-2012
		M.MCGEE	31-JUL-2012

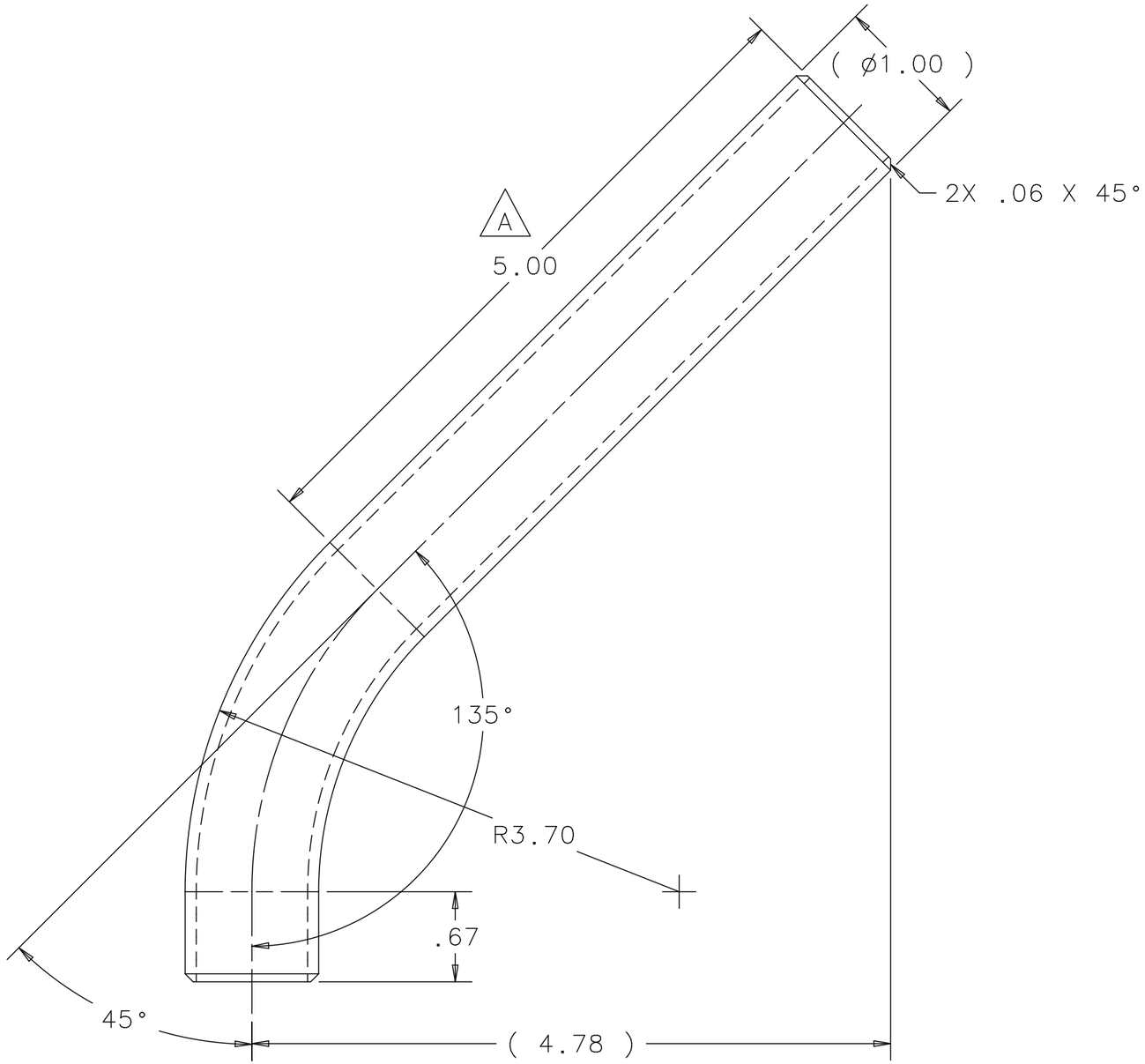

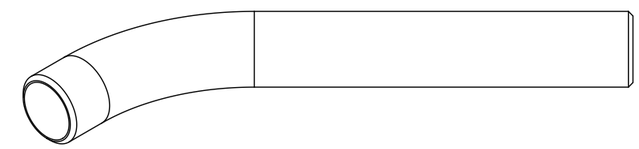

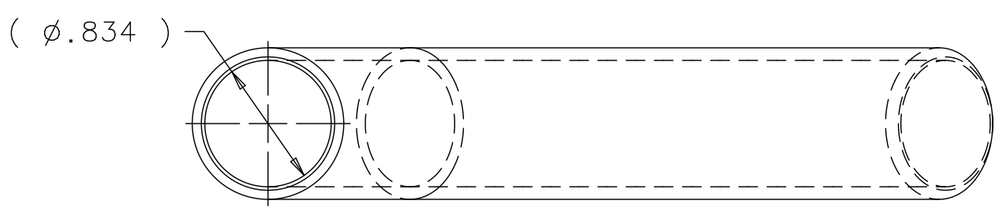

UNLESS OTHERWISE SPECIFIED			ORIGINATOR	M.MCGEE	27-OCT-2011
.XX	.XXX	ANGLES	DRAWN	R.STEWART	27-OCT-2011
± .03	± .005	± 1°	CHECKED	M.MCGEE	07-JUN-2012
			APPROVED	M.MCGEE	07-JUN-2012

1. BREAK ALL SHARP EDGES .015 MAX.
2. DO NOT SCALE DRAWING.
3. DIMENSIONS BASED UPON ASME Y14.5M-1994
4. MAX. ALL MACH. SURFACES 125
5. DRAWING UNITS: U.S. INCH

USED ON: MC-433562

MATERIAL: 316L SS SEAMLESS TUBING 1" OD .083" WALL SWAGELOK P/N SS-T16-S-083

FERMI NATIONAL ACCELERATOR LABORATORY
UNITED STATES DEPARTMENT OF ENERGY

NOVA-ANU TARGET HALL MEDIUM ENERGY TARGET U.S. REMOTE CONN EXTENSION

SCALE	DRAWING NUMBER	SHEET	REV
1:1	8875.112-MB-433815	1 OF 1	A

CREATED WITH : Ideas12NXSeries | GROUP: ACCELERATOR MECH. SUPPT.

Created: 15:10:18 on 21-02-13 (D-M-Y) By: rstewart State: 3-RELEASED