REV	DESCRIPTION	DRAWN	DATE
		APPROVED	DATE
A	ITEM 2 UPDATED	R.STEWART	31-JUL-2012
		M.MCGEE	31-JUL-2012

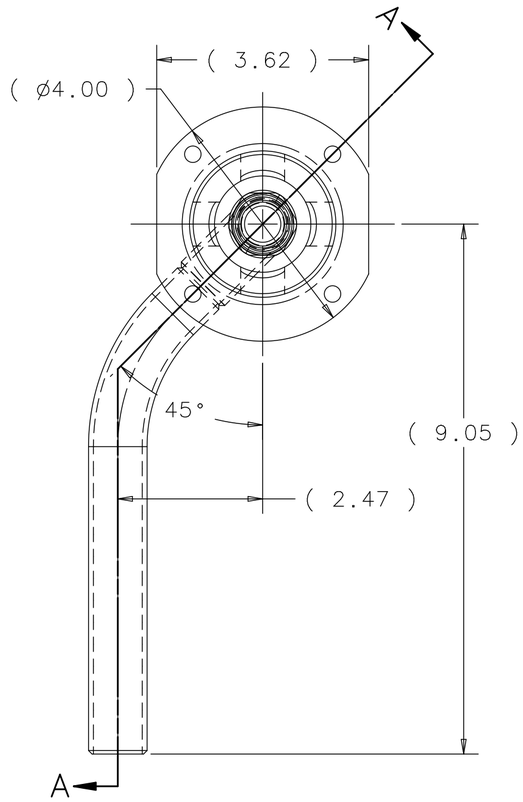

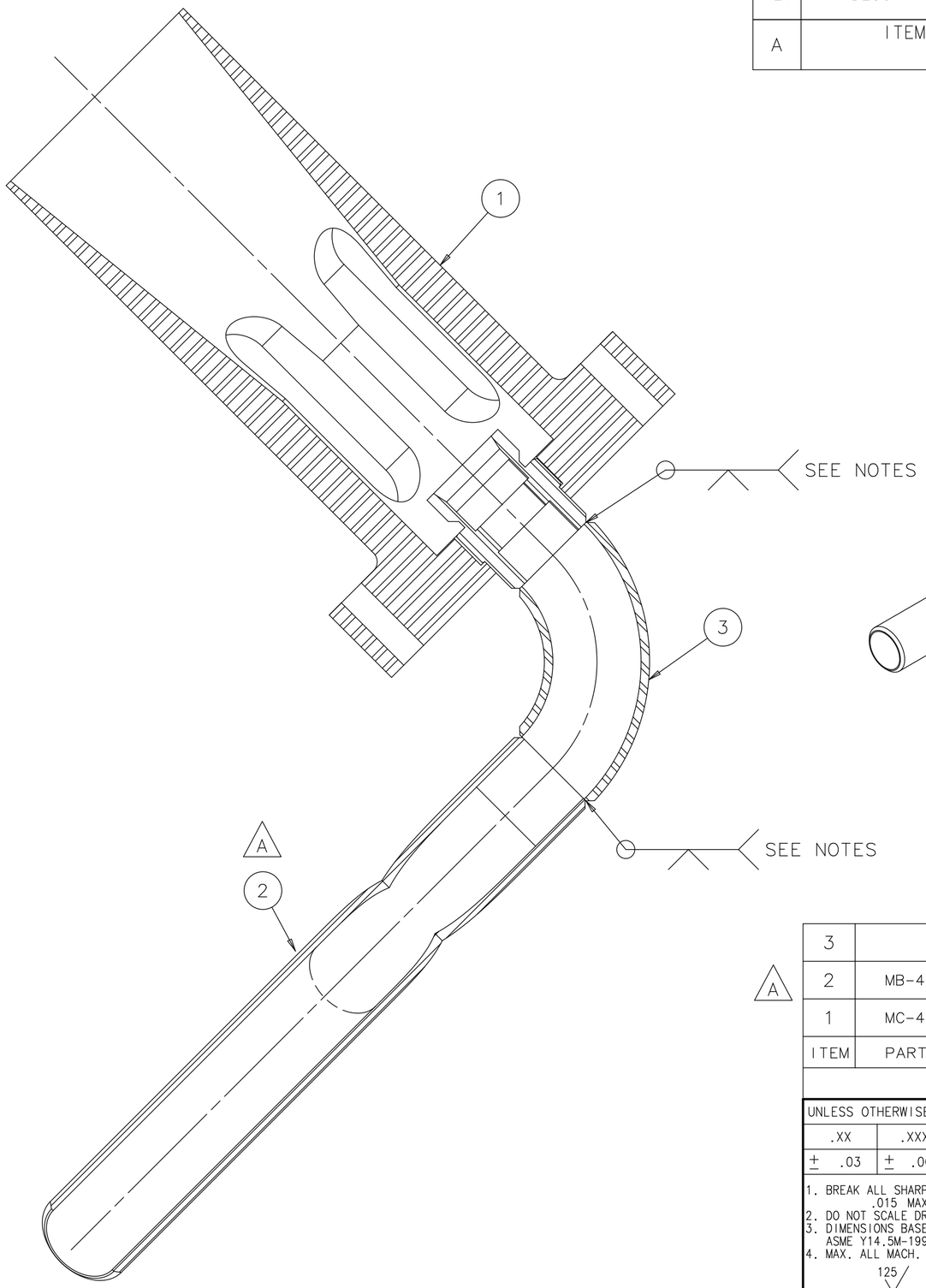

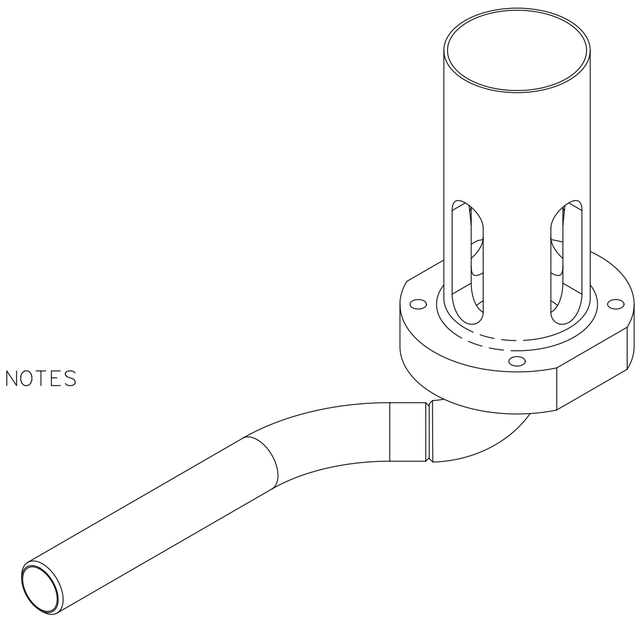

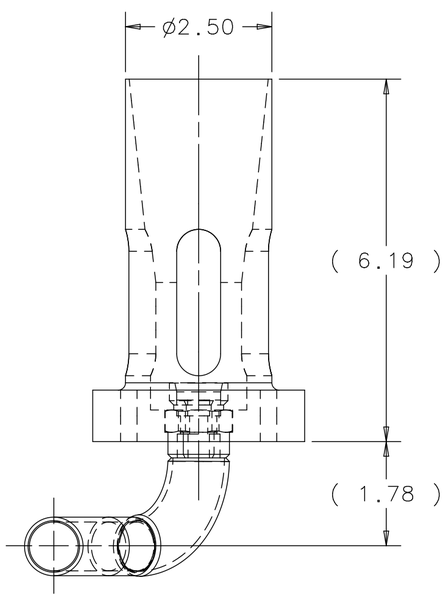

ITEM	PART NO.	DESCRIPTION OR SIZE	QTY.
3		3/4" 90° LONG RADIUS BUTT WELD ELBOW 316 S.S. SCHEDULE 10	1
2	MB-433878	U.S. RETURN CONN. HELIUM EXTENSION	1
1	MC-433559	U.S. REMOTE CONNECTOR - ASSEMBLY	1

PARTS LIST

UNLESS OTHERWISE SPECIFIED			ORIGINATOR	M.MCGEE	27-OCT-2011
.XX	.XXX	ANGLES	DRAWN	R.STEWART	27-OCT-2011
± .03	± .005	± 1°	CHECKED	M.MCGEE	07-JUN-2012
			APPROVED	M.MCGEE	07-JUN-2012

1. BREAK ALL SHARP EDGES .015 MAX.
2. DO NOT SCALE DRAWING.
3. DIMENSIONS BASED UPON ASME Y14.5M-1994
4. MAX. ALL MACH. SURFACES 125
5. DRAWING UNITS: U.S. INCH

USED ON: MD-433563

MATERIAL: SEE PARTS LIST

FERMI NATIONAL ACCELERATOR LABORATORY
UNITED STATES DEPARTMENT OF ENERGY

NOVA-ANU TARGET HALL
MEDIUM ENERGY TARGET
U.S. REMOTE CONN HELIUM - WELDED

SCALE	DRAWING NUMBER	SHEET	REV
1/2	8875.112-MC-433814	1 OF 1	A

CREATED WITH : Ideas12NXSeries GROUP: ACCELERATOR MECH. SUPPT.

SECTION A-A
SCALE: FULL

NOTES:

1. ALL WELDING TO BE DONE BY FERMILAB.
2. ALL WELDS TO BE LEAK TIGHT TO 100 PSI.