REV	DESCRIPTION	DRAWN	DATE
		APPROVED	DATE
A	VIEWS CHANGED, CUT ADDED	R.STEWART	15-MAY-2013
		M.MCGEE	15-MAY-2013

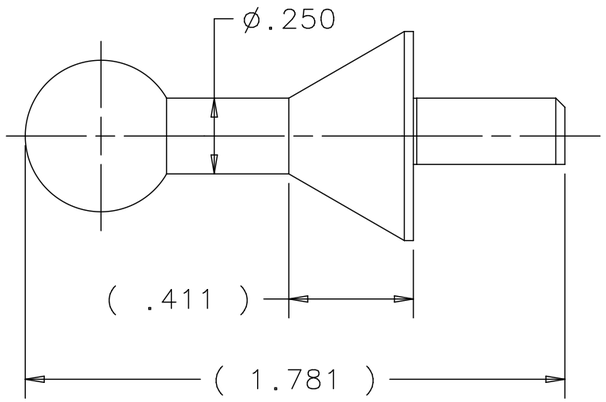

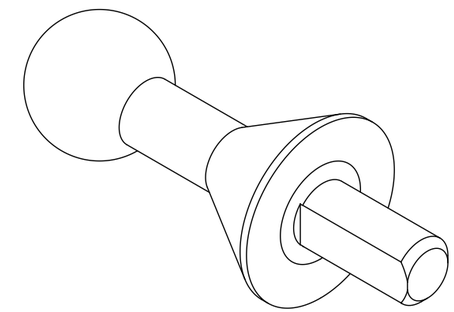

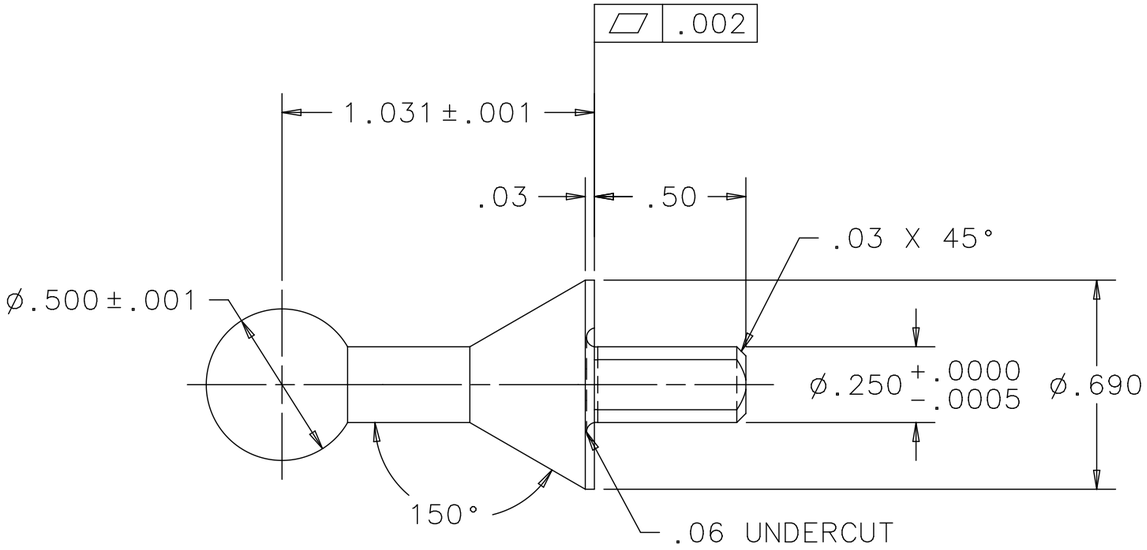

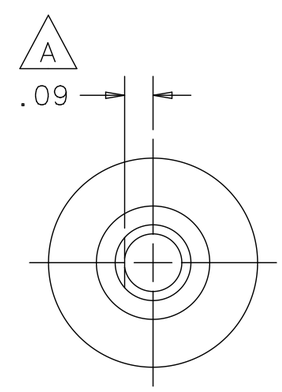

UNLESS OTHERWISE SPECIFIED			ORIGINATOR	M.MCGEE	02-DEC-2010
.XX	.XXX	ANGLES	DRAWN	R.STEWART	02-DEC-2010
± .01	± .005	± .5	CHECKED	M.MCGEE	17-DEC-2010
			APPROVED	M.MARTENS	17-DEC-2010

1. BREAK ALL SHARP EDGES .015 MAX.
2. DO NOT SCALE DRAWING.
3. DIMENSIONS BASED UPON ASME Y14.5M-1994
4. MAX. ALL MACH. SURFACES 63
5. DRAWING UNITS: U.S. INCH

USED ON: MD-433565 MD-433577

MATERIAL: 316L STAINLESS STEEL

FERMI NATIONAL ACCELERATOR LABORATORY
UNITED STATES DEPARTMENT OF ENERGY

NOVA-ANU TARGET HALL MEDIUM ENERGY TARGET BAFFLE FRAME HANGER TOOLING BALL

SCALE	DRAWING NUMBER	SHEET	REV
2:1	8875.112-MB-433656	1 OF 1	A

CREATED WITH : Ideas12NXSeries GROUP: ACCELERATOR MECH. SUPPT.

Created: 15:07:02 on 20-05-13 (D-M-Y) By: rstewart State: 3-RELEASED