REV	DESCRIPTION	DRAWN / APPROVED	DATE / DATE
A	NOTE CHANGED, NOTCHES REMOVED, AND 1/2-13 AND 3/8-16 TIME-SERTS ADDED	R.STEWART	26-NOV-2011
		M.MCGEE	28-DEC-2011
B	1/2-13 TIME-SERT CHANGED	R.STEWART	06-AUG-2012
		M.MCGEE	06-AUG-2012

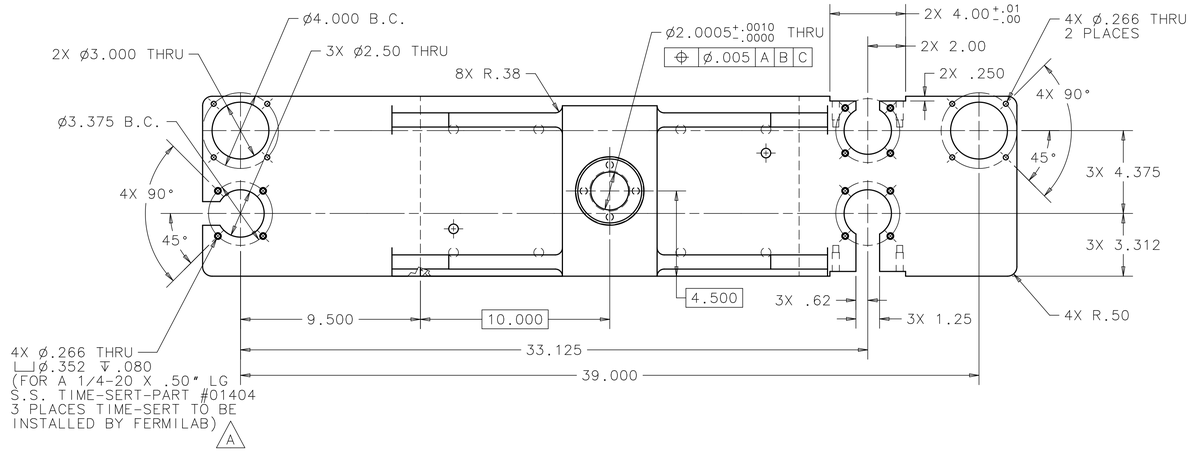

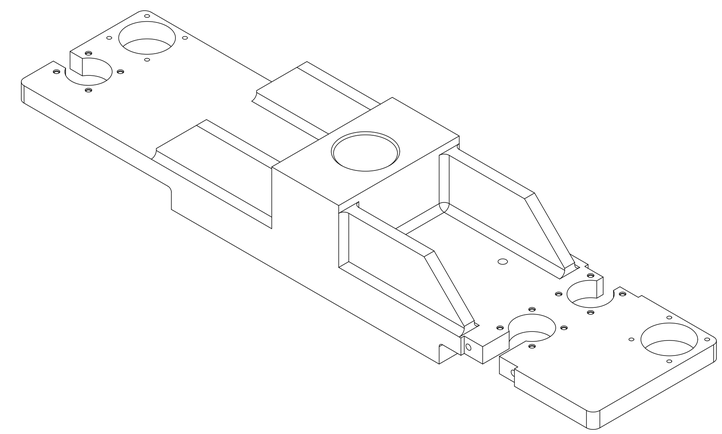

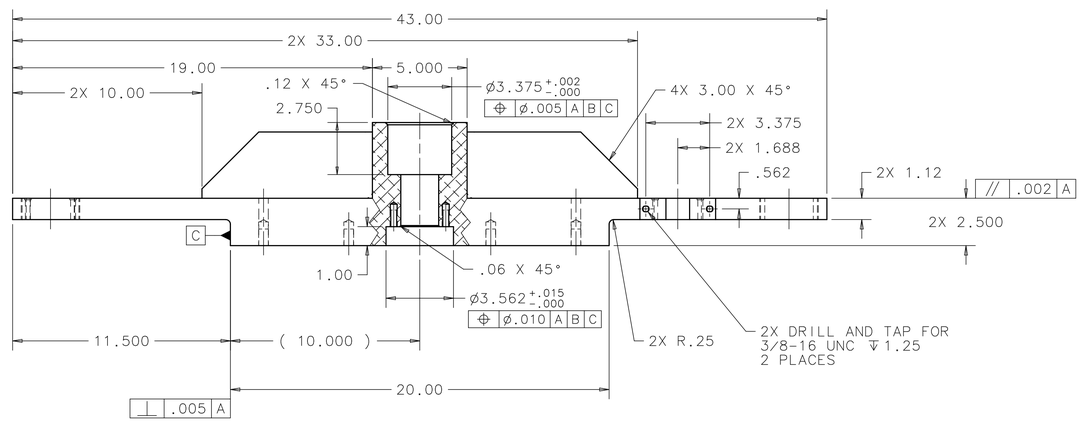

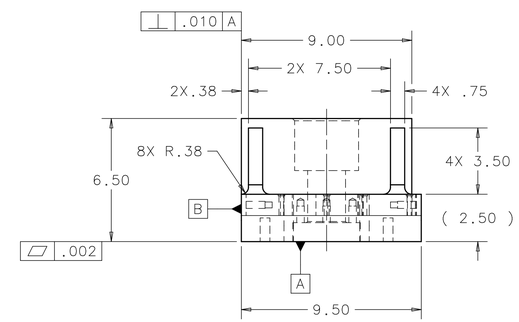

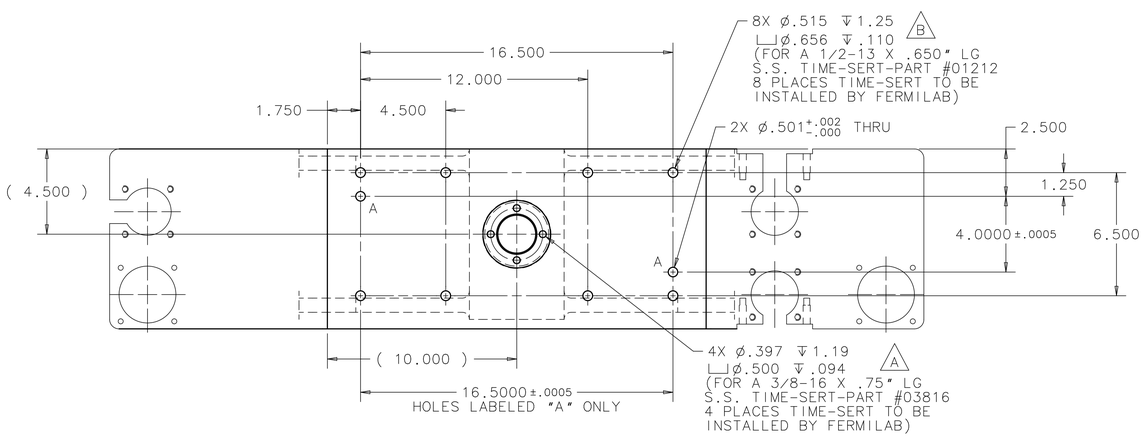

APPROXIMATE WEIGHT: 88 LBS

UNLESS OTHERWISE SPECIFIED					
.XX	.XXX	ANGLES	ORIGINATOR	M.MCGEE	11-MAR-2010
± .03	± .005	±1/2°	DRAWN	D.HURD	12-OCT-2010
			CHECKED	M.MCGEE	14-OCT-2010
			APPROVED	M.MARTENS	15-OCT-2010

1. BREAK ALL SHARP EDGES .015 MAX.
2. DO NOT SCALE DRAWING.
3. DIMENSIONS BASED UPON ASME Y14.5M-1994
4. MAX. ALL MACH. SURFACES 125
5. DRAWING UNITS: U.S. INCH

USED ON: MD-433563

MATERIAL: 6061-T6 ALUMINUM

FERMI NATIONAL ACCELERATOR LABORATORY
UNITED STATES DEPARTMENT OF ENERGY

NOVA-ANU TARGET HALL MEDIUM ENERGY TARGET UPSTREAM HANGER SUPPORT PLATE

SCALE	DRAWING NUMBER	SHEET	REV
1/4	8875.112-MD-433635	1 OF 1	B

CREATED WITH : Ideas12NXSeries | GROUP: ACCELERATOR MECH. SUPPT.