REV	DESCRIPTION	DRAWN / APPROVED	DATE / DATE
A	2.844 DIMENSION WAS 3.375, HOLE DEPTH WAS CHANGED FROM .50 TO .62, FEATURE CONTROL ADDED	R.STEWART	02-DEC-2010
		M.MCGEE	06-DEC-2010
B	COUNTERBORE REMOVED	R.STEWART	13-MAR-2012
		M.MCGEE	13-MAR-2012
C	DIMENSION CHANGED	R.STEWART	29-APR-2013
		M.MCGEE	29-APR-2013

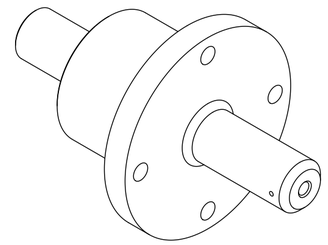

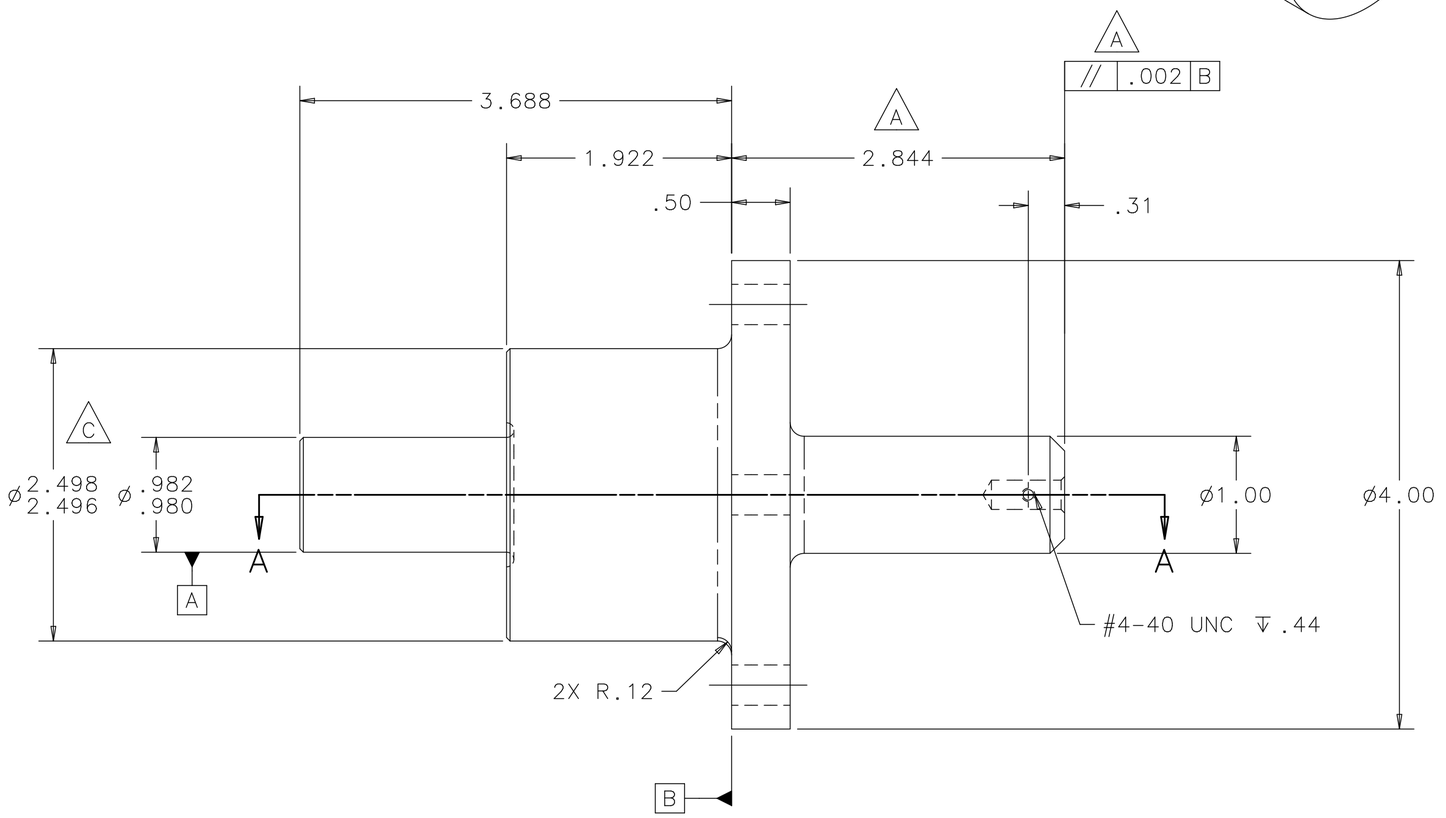

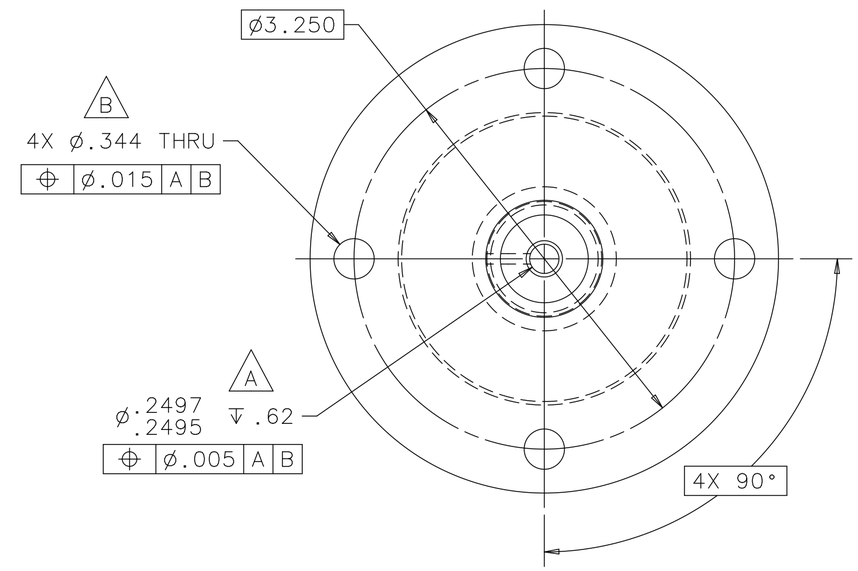

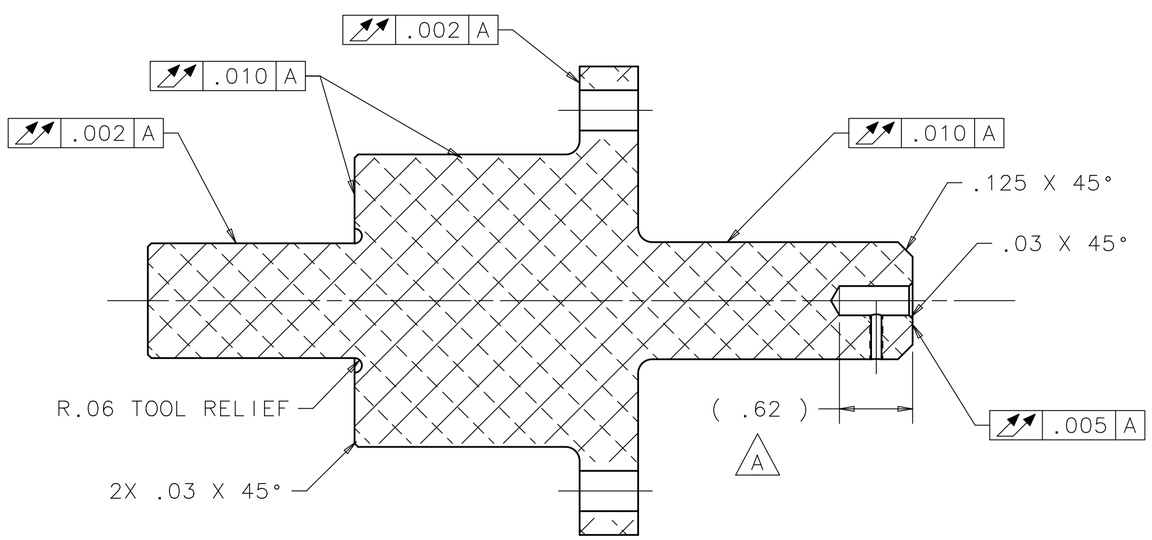

UNLESS OTHERWISE SPECIFIED			ORIGINATOR	M.MCGEE	11-MAR-2010
.XX	.XXX	ANGLES	DRAWN	D.HURD	22-SEP-2010
± .03	± .005	± 1°	CHECKED	M.MCGEE	14-OCT-2010
			APPROVED	M.MARTENS	15-OCT-2010

1. BREAK ALL SHARP EDGES .015 MAX.
2. DO NOT SCALE DRAWING.
3. DIMENSIONS BASED UPON ASME Y14.5M-1994
4. MAX. ALL MACH. SURFACES 125
5. DRAWING UNITS: U.S. INCH

USED ON: MD-433565 MD-433577

MATERIAL: 6061-T6511 ALUMINUM ø4.00 COLD FINISHED ROUND

FERMI NATIONAL ACCELERATOR LABORATORY
UNITED STATES DEPARTMENT OF ENERGY

NOVA-ANU TARGET HALL
MEDIUM ENERGY TARGET BAFFLE
FRAME HANGER PIVOT STUD

SCALE	DRAWING NUMBER	SHEET	REV
FULL	8875.112-MC-433578	1 OF 1	C

CREATED WITH : Ideas12NXSeries GROUP: ACCELERATOR MECH. SUPPT.