REV	DESCRIPTION	DRAWN	DATE
		APPROVED	DATE
A	CHAMFER DIMENSION ADDED	R.STEWART	01-FEB-2012
		M.MCGEE	01-FEB-2012
B	CHAMFER REMOVED	R.STEWART	21-FEB-2013
		M.MCGEE	21-FEB-2013

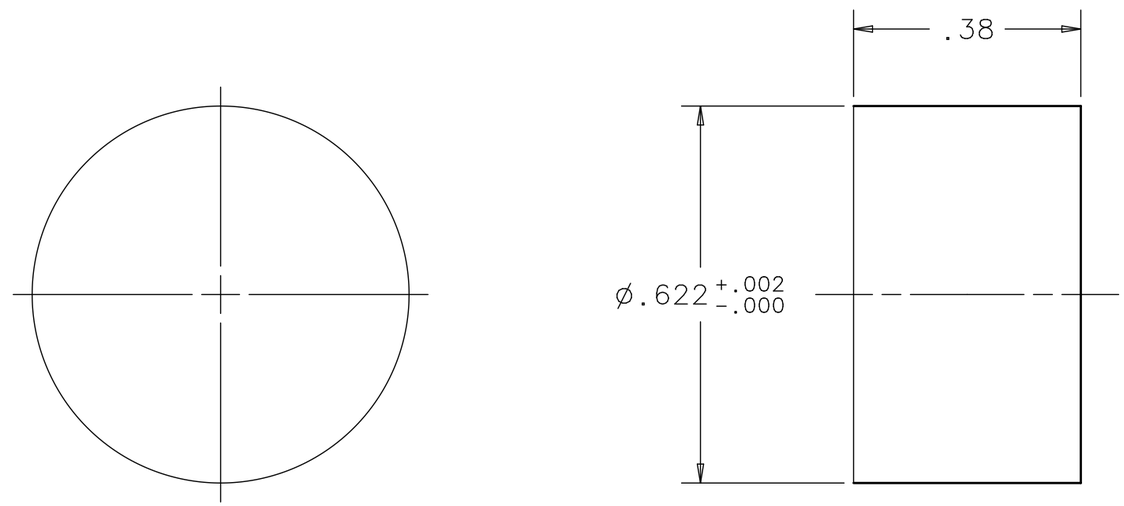

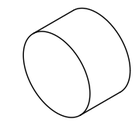

UNLESS OTHERWISE SPECIFIED			ORIGINATOR	M.MCGEE	11-MAR-2010
.XX	.XXX	ANGLES	DRAWN	D.HURD	23-SEP-2010
± .02	± .005	± 1°	CHECKED	M.MCGEE	14-OCT-2010
			APPROVED	M.MARTENS	15-OCT-2010

1. BREAK ALL SHARP EDGES .015 MAX.
2. DO NOT SCALE DRAWING.
3. DIMENSIONS BASED UPON ASME Y14.5M-1994
4. MAX. ALL MACH. SURFACES 125
5. DRAWING UNITS: U.S. INCH

USED ON: MC-433575

MATERIAL: 6061-T6 ALUMINUM

FERMI NATIONAL ACCELERATOR LABORATORY
UNITED STATES DEPARTMENT OF ENERGY

NOVA-ANU TARGET HALL
MEDIUM ENERGY TARGET BAFFLE
D.S. FRAME HANGER - WELD PLUG

SCALE	DRAWING NUMBER	SHEET	REV
4:1	8875.112-MB-433573	1 OF 1	B

CREATED WITH : Ideas12NXSeries | GROUP: ACCELERATOR MECH. SUPPT.