REV	DESCRIPTION	DRAWN / APPROVED	DATE / DATE
A	ø.530 THRU HOLE REMOVED	R.STEWART	04-NOV-2011
	NUMBER OF HOLES CHANGED	M.MCGEE	28-DEC-2011
B	HOLE DIM, NOTE, AND C'SINK	R.STEWART	21-FEB-2013
	ADDED AND C'BORE REMOVED	M.MCGEE	21-FEB-2013
C	1/4-20 HOLES REMOVED, HOLES	R.STEWART	29-APR-2013
	FOR TIME-SERTS ADDED	M.MCGEE	29-APR-2013
D	ADDED MISSING DIMENSION	J.BELESKI	30-JAN-2014
	FOR THERMAL COUPLE HOLES	M.MCGEE	30-JAN-2013

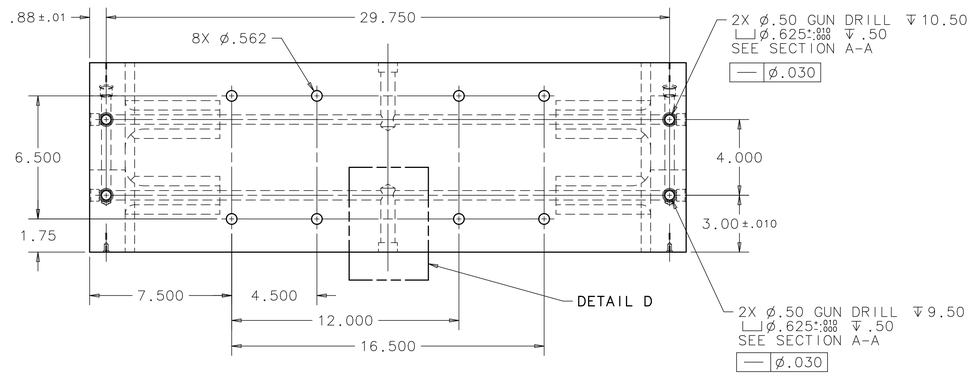

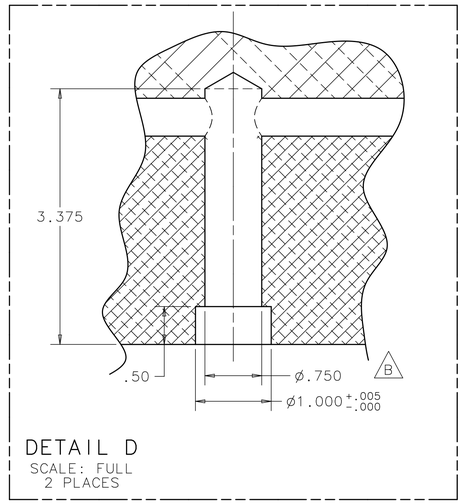

DETAIL D
SCALE: FULL
2 PLACES

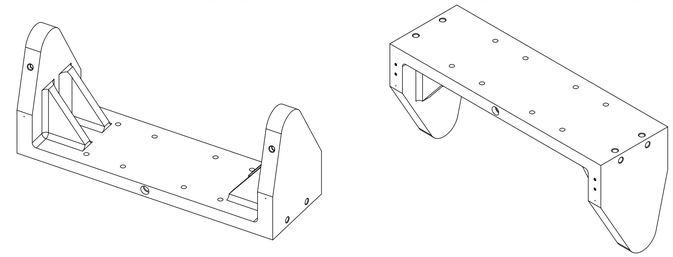

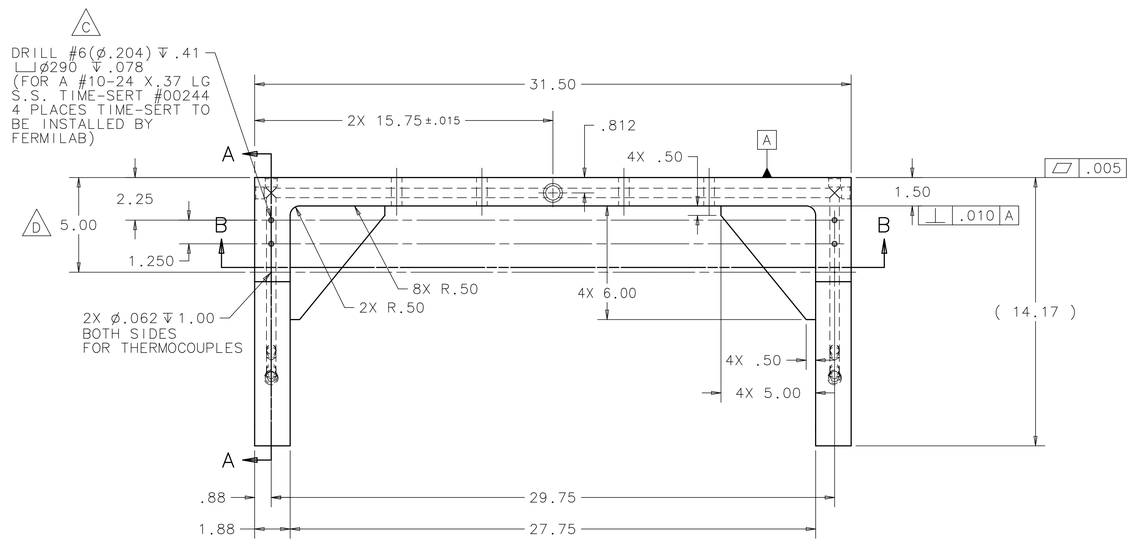

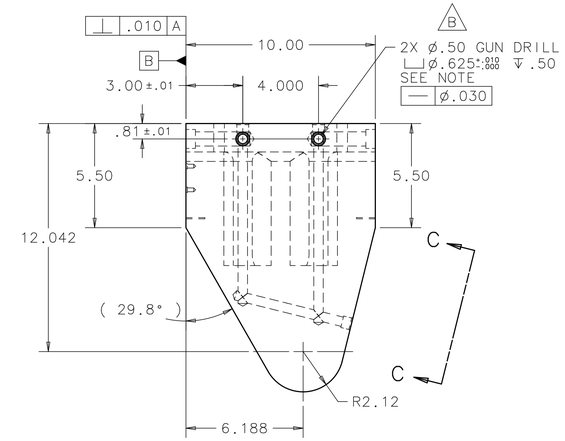

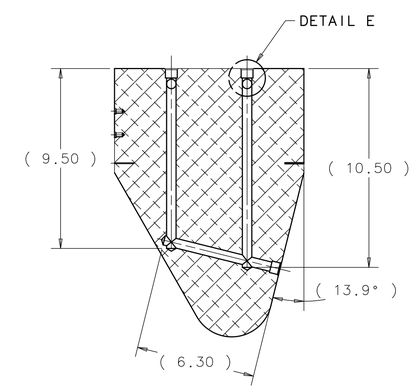

SECTION A-A

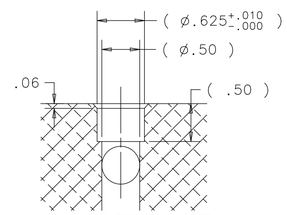

DETAIL E
SCALE: FULL
10 PLACES

B NOTE: GUN DRILL FROM ONE END ONLY.

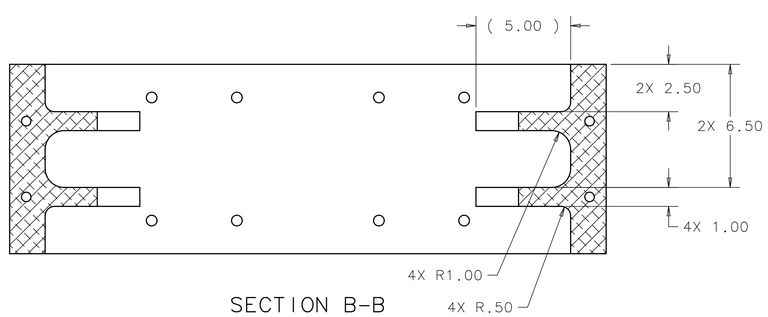

SECTION B-B

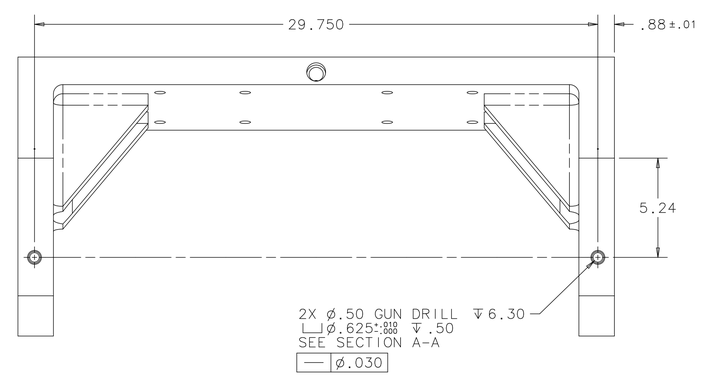

VIEW C-C

APPROXIMATE WEIGHT: 86 LBS

UNLESS OTHERWISE SPECIFIED			ORIGINATOR	M.MCGEE	11-MAR-2010
.XX	.XXX	ANGLES	DRAWN	D.HURD	23-SEP-2010
± .03	± .005	± 1°	CHECKED	M.MCGEE	14-OCT-2010
			APPROVED	M.MARTENS	15-OCT-2010

1. BREAK ALL SHARP EDGES .015 MAX.
2. DO NOT SCALE DRAWING.
3. DIMENSIONS BASED UPON ASME Y14.5M-1994
4. MAX. ALL MACH. SURFACES 125
5. DRAWING UNITS: U.S. INCH

USED ON: MC-433575

MATERIAL: 6061-T6 ALUMINUM

FERMI NATIONAL ACCELERATOR LABORATORY
UNITED STATES DEPARTMENT OF ENERGY

NOVA-ANU TARGET HALL
MEDIUM ENERGY TARGET BAFFLE
D.S FRAME HANGER - PRE. MACHINE

SCALE	DRAWING NUMBER	SHEET	REV
1/4	8875.113-MD-433572	1 OF 1	D

CREATED WITH : Ideas12NXSeries GROUP: ACCELERATOR MECH. SUPPT.