REV	DESCRIPTION	DRAWN	DATE
		APPROVED	DATE
A	ITEM 8 UPDATED. ITEM 21 AND NOTE FOR ITEM 21 REMOVED,MATERIAL FOR AND ITEM 17 CHANGED.	R.STEWART	26-NOV-2011
		M.MCGEE	28-DEC-2011
B	MODEL UPDATED	R.STEWART	12-AUG-2013
		M.MCGEE	12-AUG-2013

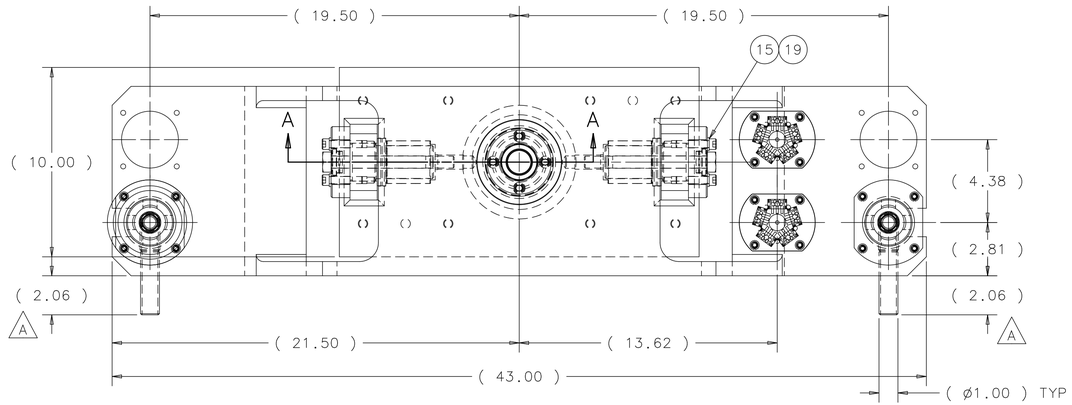

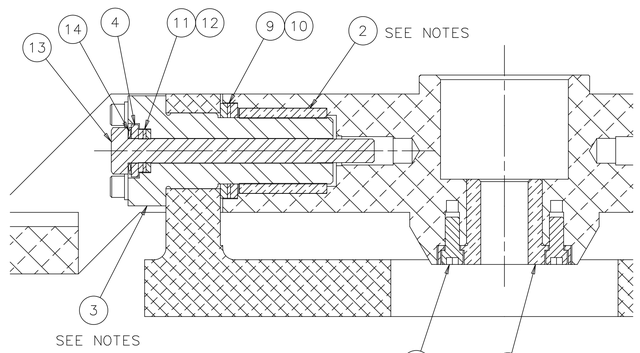

SECTION A-A
SCALE: 1/2

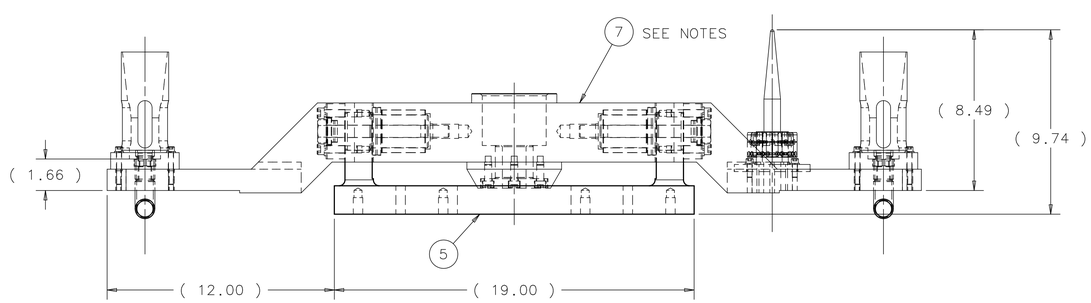

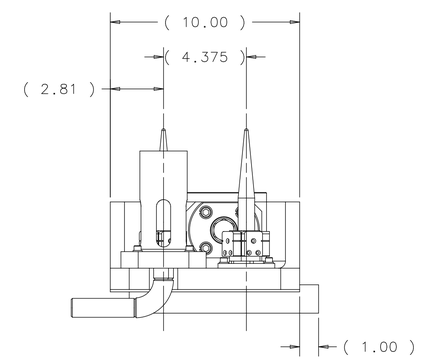

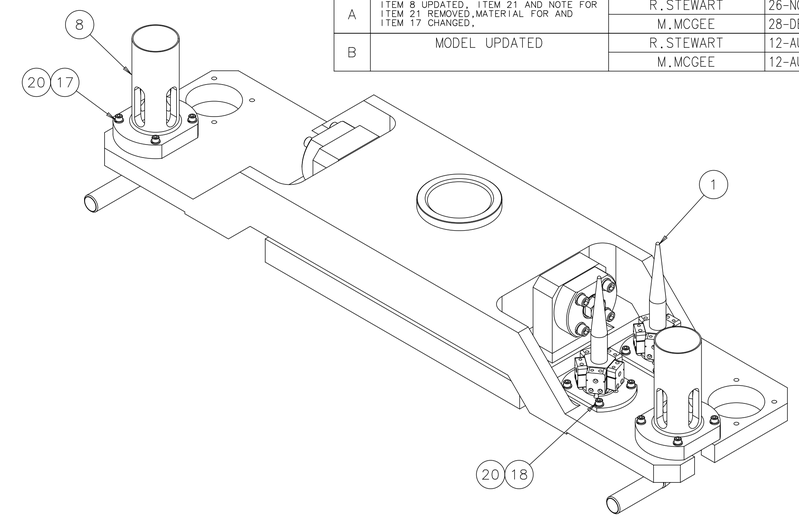

ITEM	PART NO.	DESCRIPTION OR SIZE	QTY.
A 21		~~ø.250 DOWEL PIN 2.00" LG., 316 SS~~	~~4~~
20	SCHNORR S 6.35 SS	1/4" SERRATED SAFETY WASHER, SS	16
19	SCHNORR S 10 SS	3/8" SERRATED SAFETY WASHER, SS	8
18	MCMASTER-CARR PN 92185A540 OR EQ	SHCS 1/4-20 UNC X .75" LG., 316 SS	8
A 17		SHCS 1/4-20 UNC X 1.75" LG., TITANIUM	8
16	MCMASTER-CARR PN 9215A616 OR EQ	SHCS 3/8-16 UNC X .875" LG., 316 SS	4
15	MCMASTER-CARR PN 92185A630 OR EQ	SHCS 3/8-16 UNC X 1.75" LG., 316 SS	8
14	SCHNORR S 16 SS	ø5/8" SERRATED SAFETY WASHER, SS	2
13	MCMASTER-CARR PN 92186A820 OR EQ	HHCS 5/8-11 UNC X 6.50" LG., 316 SS	2
12	TORRINGTON NTA-1018	THRUST BEARING	2
11	TORRINGTON TRF-1018	THRUST WASHER	4
10	TORRINGTON NTA-2840	THRUST BEARING	2
9	TORRINGTON TRF-2840	THRUST WASHER	4
B 8	MC-433570	D.S. REMOTE CONNECTOR - WELDED	2
7	MD-433566	DOWNSTREAM HANGER SUPPORT PLATE	1
6	MB-427774	DRAW BAR NUT - DOWNSTREAM	1
5	MD-427771	PIVOT BLOCK - DS	1
4	MB-406082	PIVOT SHAFT WASHER	4
3	MC-406081	PIVOT SHAFT	2
2	MB-406067	SOLID BLOCK BUSHING	2
1	MC-406062	ELECTRICAL CONNECTOR MOUNT	2

PARTS LIST

UNLESS OTHERWISE SPECIFIED			ORIGINATOR	M.MCGEE	11-MAR-2010
.XX	.XXX	ANGLES	DRAWN	D.HURD	02-SEP-2010
± .03	± .005	± 1°	CHECKED	M.MCGEE	14-OCT-2010
			APPROVED	M.MARTENS	15-OCT-2010

1. BREAK ALL SHARP EDGES .02 MAX.
2. DO NOT SCALE DRAWING.
3. DIMENSIONS BASED UPON ASME Y14.5M-1994
4. MAX. ALL MACH. SURFACES 125
5. DRAWING UNITS: U.S. INCH

USED ON: MD-433577

MATERIAL: SEE PARTS LIST

FERMI NATIONAL ACCELERATOR LABORATORY
UNITED STATES DEPARTMENT OF ENERGY

NOVA-ANU TARGET HALL
MEDIUM ENERGY TARGET BAFFLE
DOWNSTREAM PIVOT ASSEMBLY

SCALE	DRAWING NUMBER	SHEET	REV
1/4	8875.112-MD-433571	1 OF 1	B

CREATED WITH : Ideas12NXSeries | GROUP: ACCELERATOR MECH. SUPPT.

NOTES:

1. FINISH MACHINE SOLID BLOCK BUSHING (ITEM #2) O.D. FOR A .003"-.005" INTERFERENCE FIT INTO DOWNSTREAM HANGER SUPPORT PLATE (ITEM #7).
2. AFTER PRESS FIT INSTALLATION OF SOLID BLOCK BUSHING, FINISH MACHINE I.D. FOR .002"-.004" CLEARANCE FIT WITH CORRESPONDING PIVOT SHAFT (ITEM #3)
3. APPROXIMATE ASSEMBLY WEIGHT = 170 LBS.