REV	DESCRIPTION	DRAWN	DATE
		APPROVED	DATE
A	ITEM 1 UPDATED	R,STEWART	26-NOV-2011
		M.MCGEE	28-DEC-2011
B	MODIFIED REMOTE CONNECTOR TO ACCOMMODATE 3/4" FITTING. CHANGED PART NO. FOR ITEM 3 & 4.	DGH	16-APR-2013
		M.MCGEE	03-MAY-2013

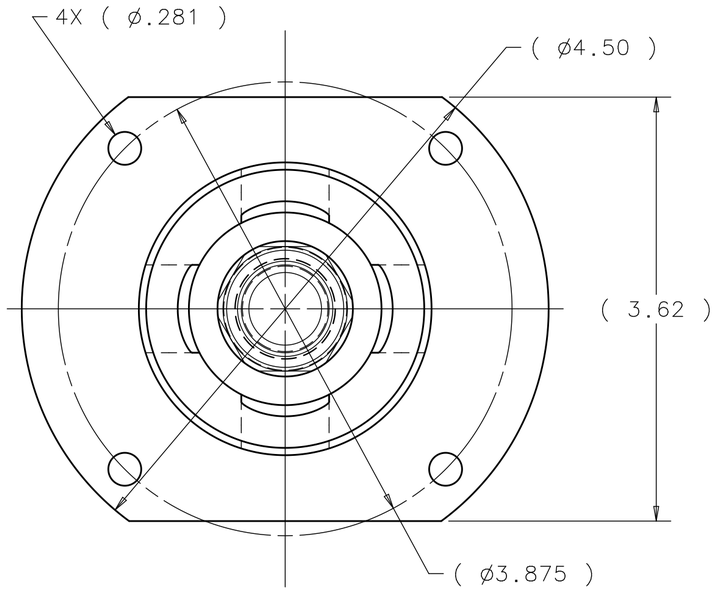

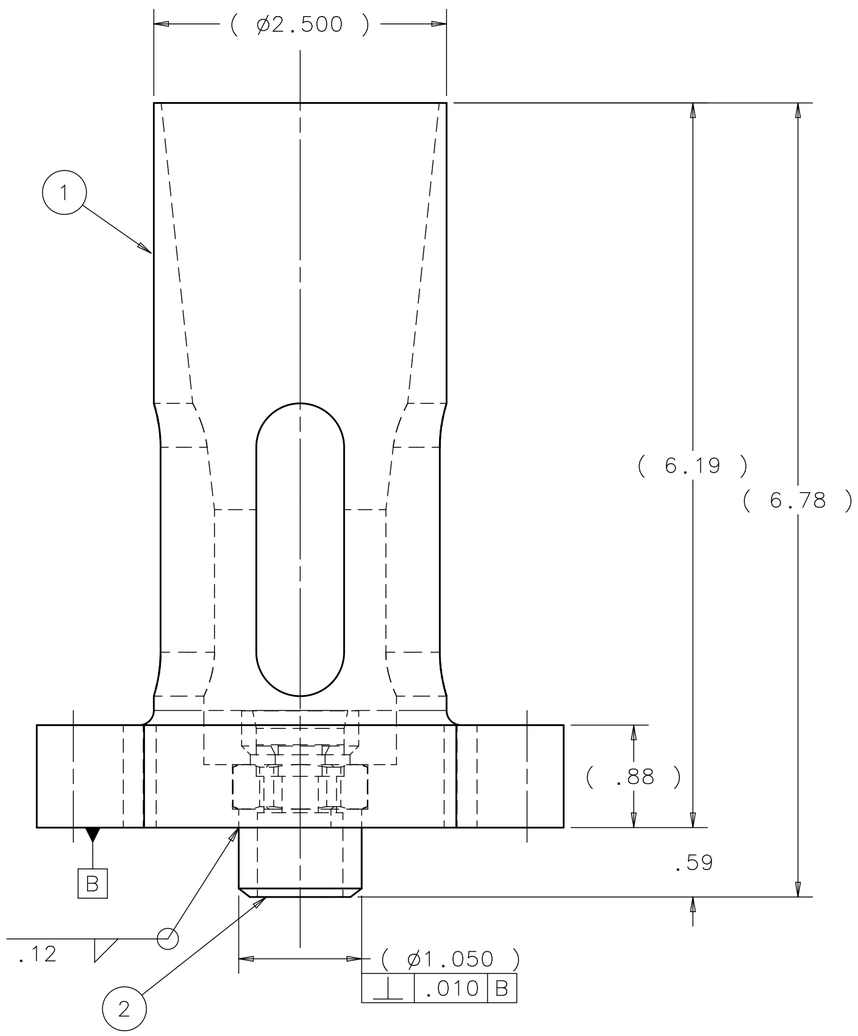

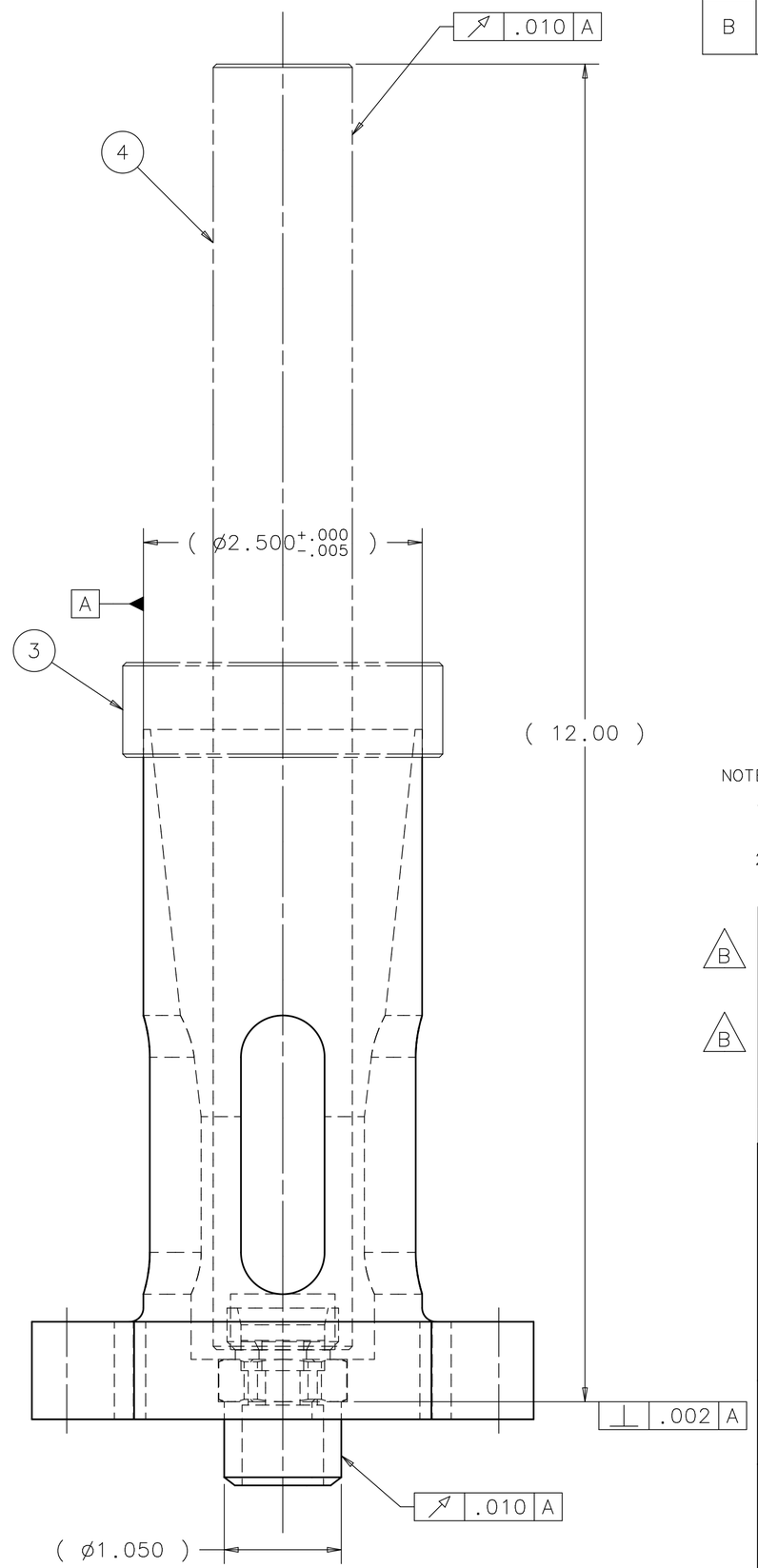

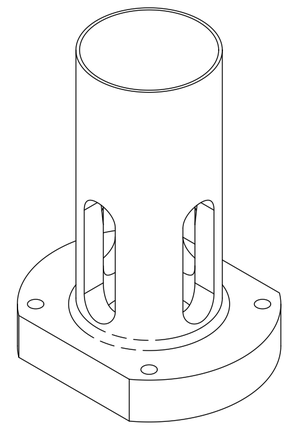

NOTES:

1. USE CENTERING RING (ITEM #3) AND CHECKING MANDREL (ITEM #4) TO VERIFY FORM OF FINISHED WELDMENT.
2. ALL WELDING TO BE PREFORMED BY FERMILAB.

ITEM	PART NO.	DESCRIPTION OR SIZE	QTY.
4	MB-433626	U.S. REMOTE CONN. - CHECKING MANDREL	1
3	MB-433625	U.S. REMOTE CONN. - CENTERING RING	1
2	MB-433568	MODIFIED D.S. WELD CONNECTOR	1
1	MC-433567	D.S. REMOTE CONNECTOR BODY	1

PARTS LIST

UNLESS OTHERWISE SPECIFIED			ORIGINATOR	M.MCGEE	11-MAR-2010
.XX	.XXX	ANGLES	DRAWN	D.HURD	24-SEP-2010
± .03	± .005	± 1°	CHECKED	M.MCGEE	14-OCT-2010
			APPROVED	M.MARTENS	15-OCT-2010

1. BREAK ALL SHARP EDGES .015 MAX.
2. DO NOT SCALE DRAWING.
3. DIMENSIONS BASED UPON ASME Y14.5M-1994
4. MAX. ALL MACH. SURFACES 125
5. DRAWING UNITS: U.S. INCH

USED ON: MC-433570

MATERIAL: SEE PARTS LIST

FERMI NATIONAL ACCELERATOR LABORATORY
UNITED STATES DEPARTMENT OF ENERGY

NOVA-ANU TARGET HALL
MEDIUM ENERGY TARGET BAFFLE
D.S. REMOTE CONNECTOR - ASSEMBLY

SCALE	DRAWING NUMBER	SHEET	REV
1/2	8875.112-MC-433569	1 OF 1	B

CREATED WITH : Ideas12NXSeries GROUP: ACCELERATOR MECH. SUPPT.