REV	DESCRIPTION	DRAWN	DATE
		APPROVED	DATE
A	NOTES EDITED	R.STEWART	30-NOV-2011
		M.MCGEE	28-DEC-2011

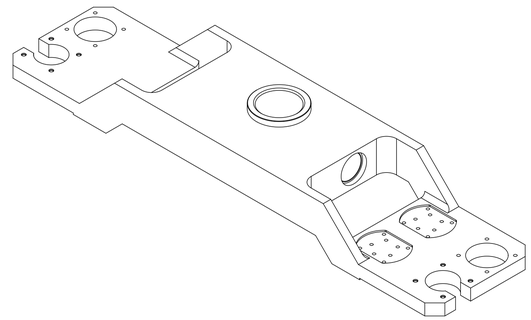

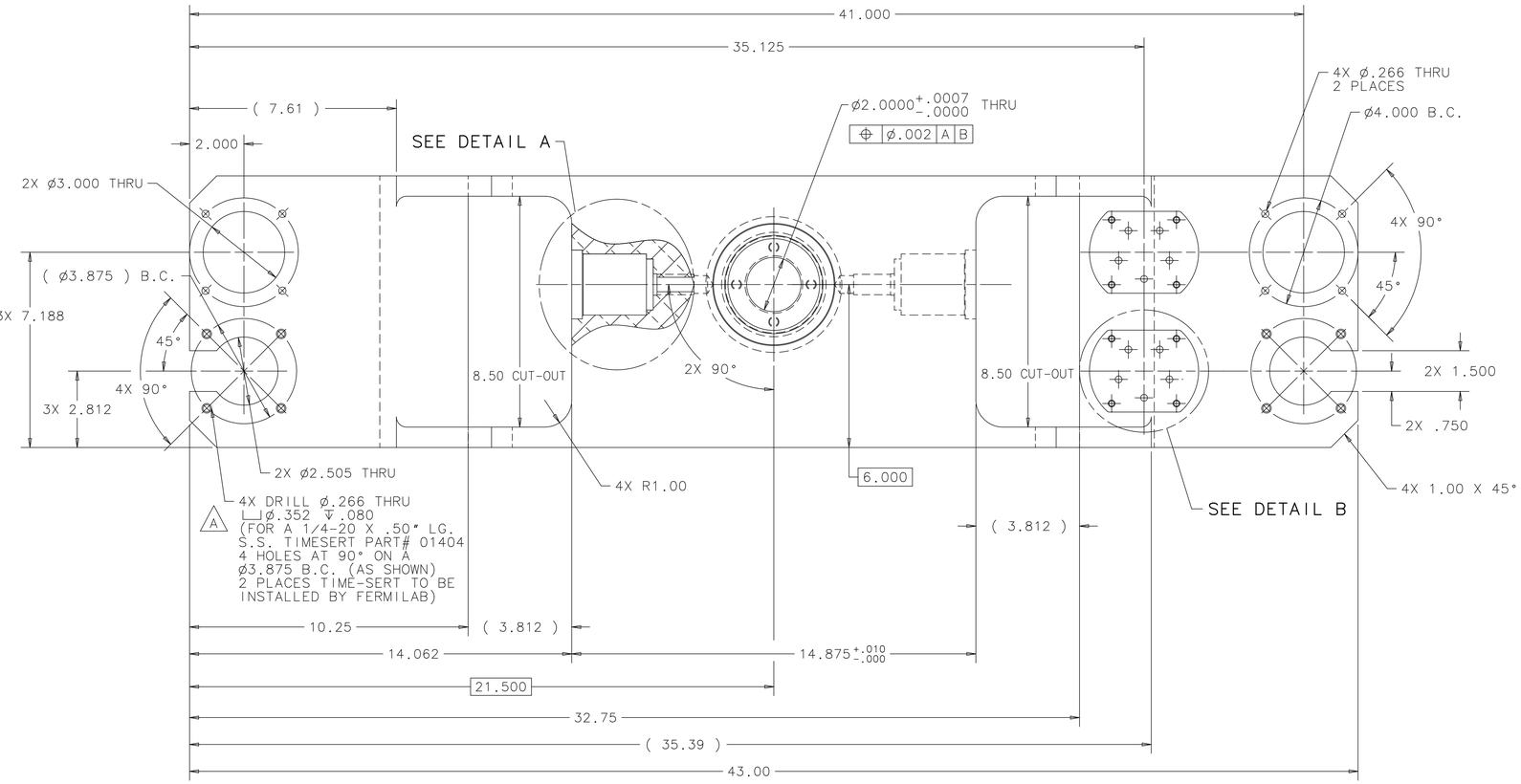

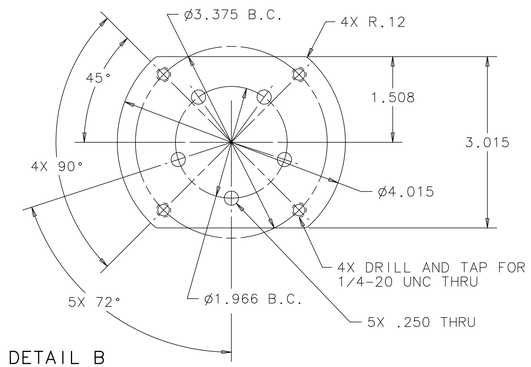

DETAIL B
2 PLACES

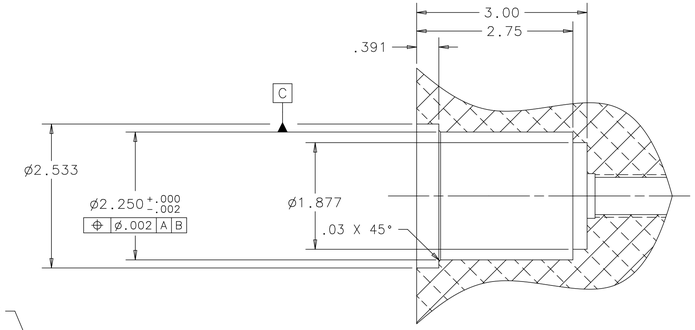

DETAIL A
2 PLACES

APPROXIMATE WEIGHT: 67 LBS

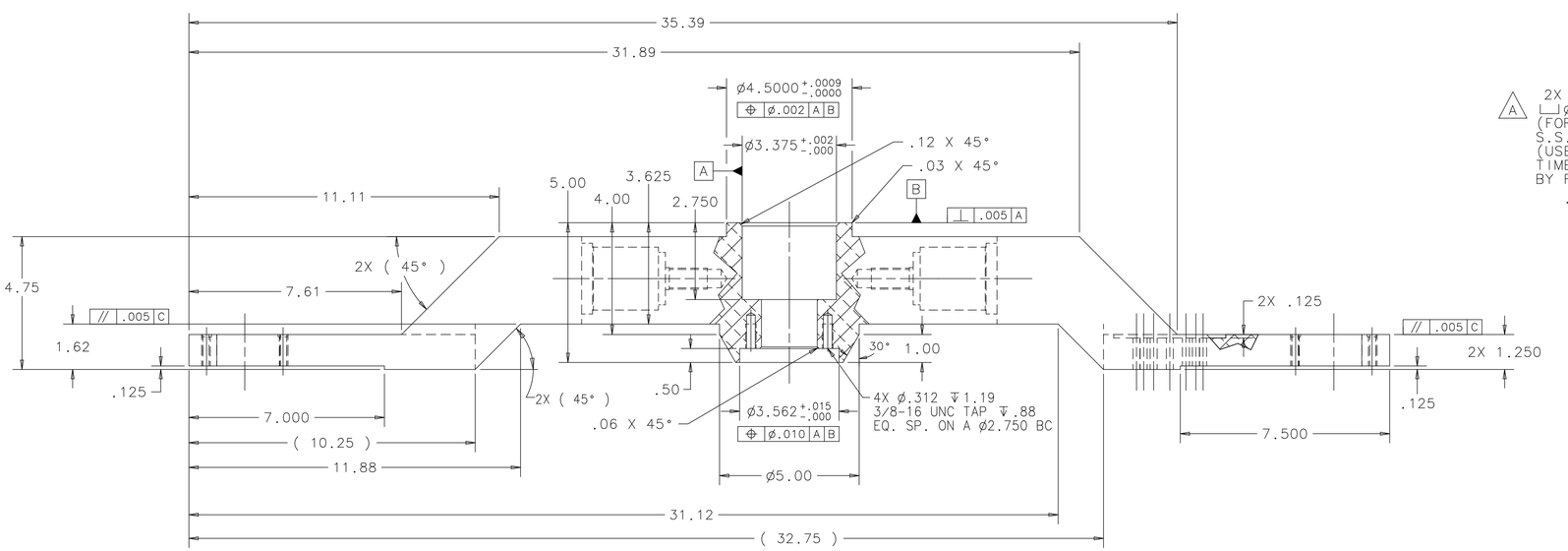

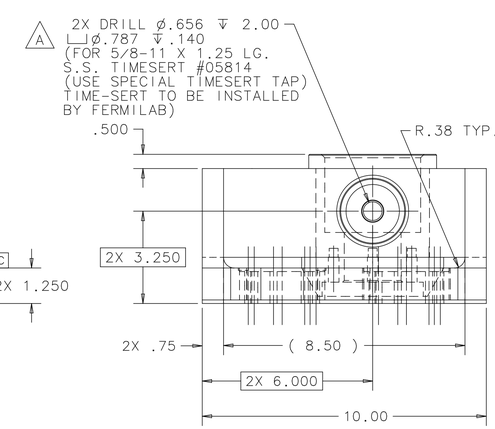

UNLESS OTHERWISE SPECIFIED			ORIGINATOR	M.MCGEE	11-MAR-2010
.XX	.XXX	ANGLES	DRAWN	D.HURD	24-SEP-2010
± .03	± .005	±1/2°	CHECKED	M.MCGEE	14-OCT-2010
			APPROVED	M.MARTENS	15-OCT-2010

1. BREAK ALL SHARP EDGES .015 MAX.
2. DO NOT SCALE DRAWING.
3. DIMENSIONS BASED UPON ASME Y14.5M-1994
4. MAX. ALL MACH. SURFACES 125
5. DRAWING UNITS: U.S. INCH

USED ON: MD-433571

MATERIAL: 6061-T6 ALUMINUM

FERMI NATIONAL ACCELERATOR LABORATORY
UNITED STATES DEPARTMENT OF ENERGY

NOVA-ANU TARGET HALL
MEDIUM ENERGY TARGET BAFFLE
DOWNSTREAM HANGER SUPPORT PLATE

SCALE	DRAWING NUMBER	SHEET	REV
3/8	8875.112-MD-433566	1 OF 1	A

CREATED WITH : Ideas12NXSeries GROUP: ACCELERATOR MECH. SUPPT.