REV	DESCRIPTION	DRAWN	DATE
		APPROVED	DATE
A	HOLE CHANGED	R.STEWART	30-NOV-2011
		M.MCGEE	28-DEC-2011
B	1/4-20 HOLES REMOVED, HOLES FOR TIME-SERTS, SECTION B-B, AND LIMIT DIMENSION ADDED	R.STEWART	29-APR-2013
		M.MCGEE	29-APR-2013

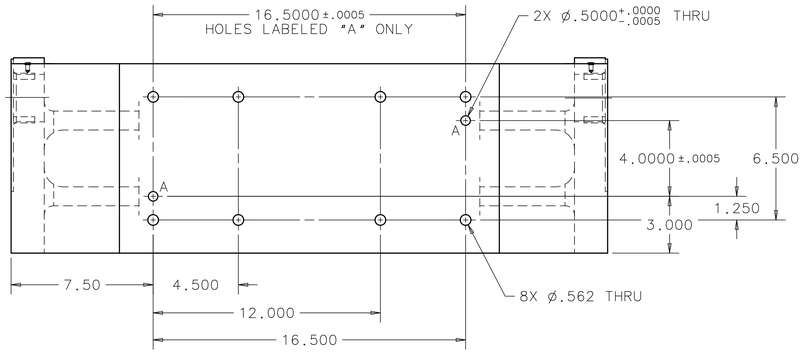

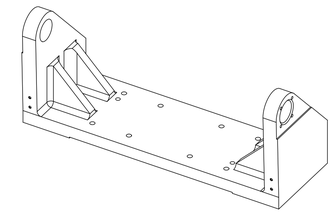

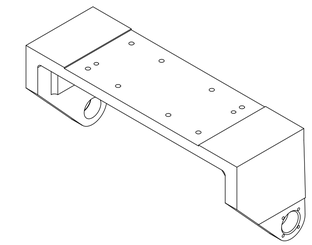

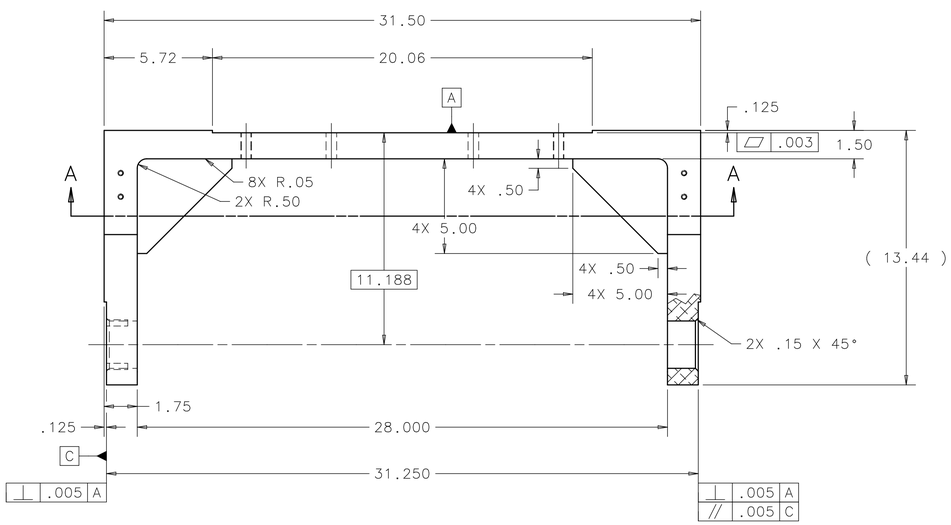

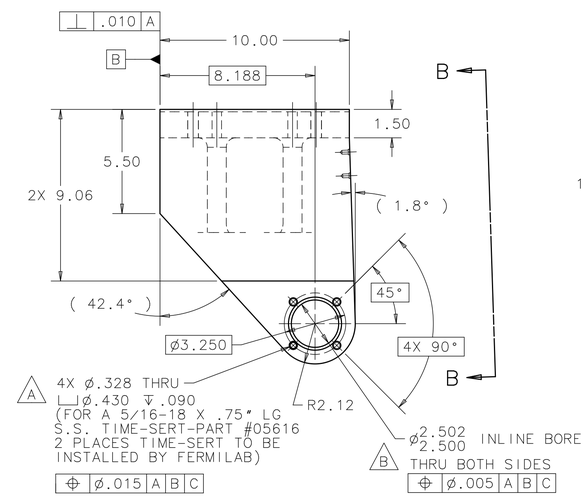

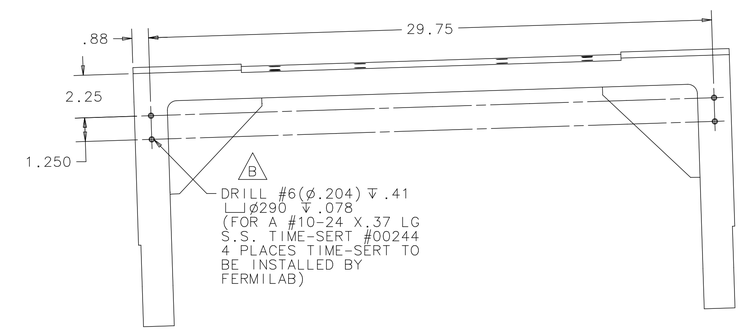

SECTION B-B

APPROXIMATE WEIGHT: 80 LBS

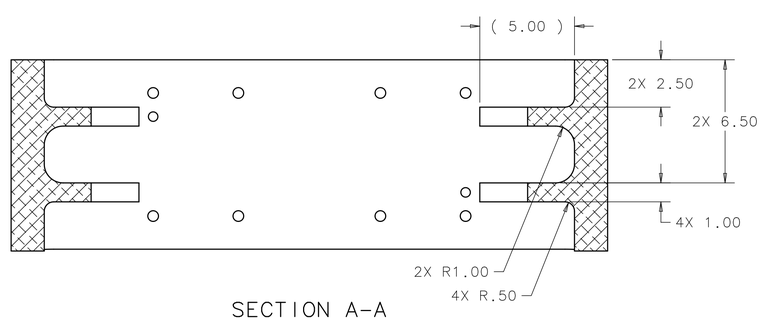

SECTION A-A

UNLESS OTHERWISE SPECIFIED			ORIGINATOR	M.MCGEE	11-MAR-2010
.XX	.XXX	ANGLES	DRAWN	D.HURD	22-SEP-2010
± .03	± .005	± 1°	CHECKED	M.MCGEE	14-OCT-2010
			APPROVED	M.MARTENS	15-OCT-2010

1. BREAK ALL SHARP EDGES .015 MAX.
2. DO NOT SCALE DRAWING.
3. DIMENSIONS BASED UPON ASME Y14.5M-1994
4. MAX. ALL MACH. SURFACES 125
5. DRAWING UNITS: U.S. INCH

USED ON: MD-433565

MATERIAL: 6061-T6 ALUMINUM

FERMI NATIONAL ACCELERATOR LABORATORY
UNITED STATES DEPARTMENT OF ENERGY

NOVA-ANU TARGET HALL MEDIUM ENERGY TARGET BAFFLE UPSTREAM FRAME HANGER

SCALE	DRAWING NUMBER	SHEET	REV
1/4	8875.112-MD-433564	1 OF 1	B

CREATED WITH : Ideas12NXSeries | GROUP: ACCELERATOR MECH. SUPPT.