REV	DESCRIPTION	DRAWN	DATE
		APPROVED	DATE
A	ITEM 4 AND ITEM 3 UPDATED, ITEM 2 QTY CHANGED TO 1. ITEM 8 AND NOTE FOR ITEM 8 REMOVED, ITEM 9 AND 10 ADDED, AND ITEM 6 MATERIAL CHANGED	R.STEWART	26-NOV-2011
		M.MCGEE	30-MAR-2012
B	ITEMS 2,3 AND 9 UPDATED	R.STEWART	31-JUL-2012
		M.MCGEE	31-JUL-2012

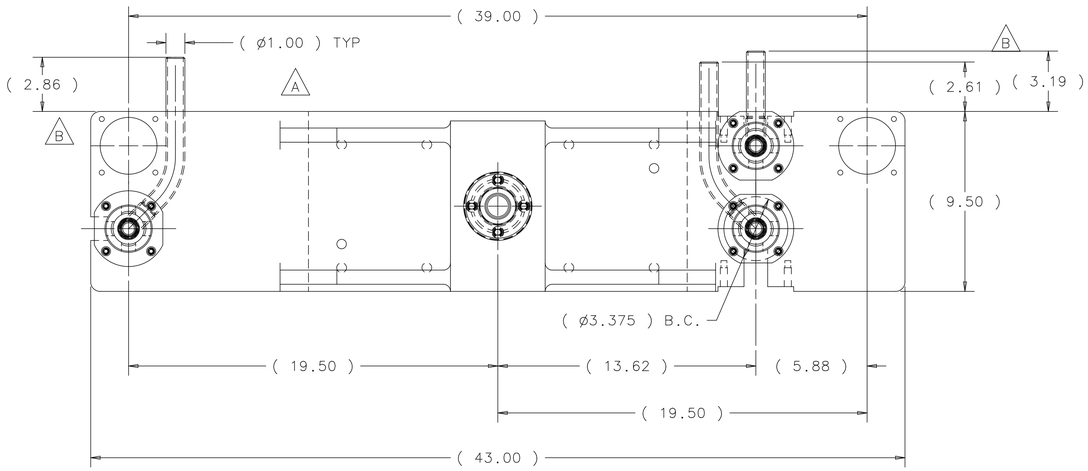

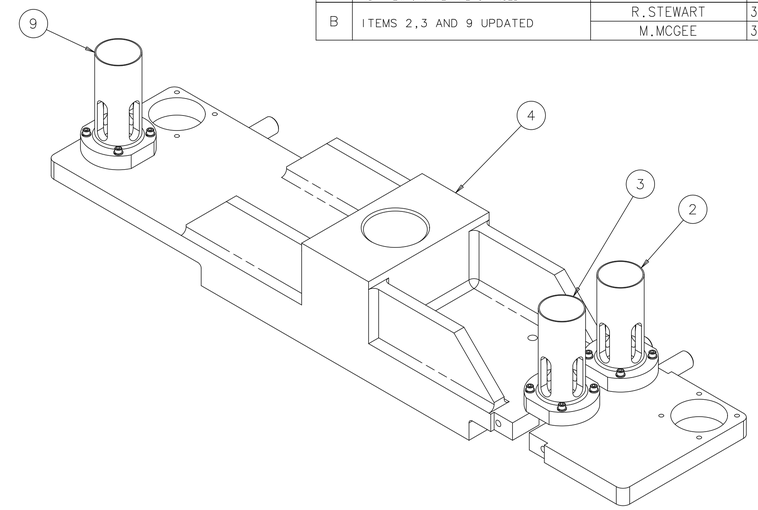

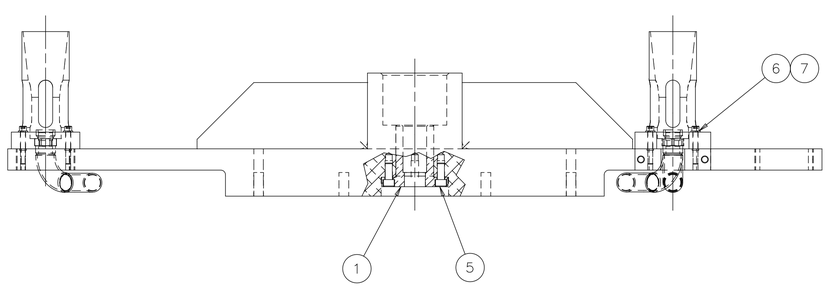

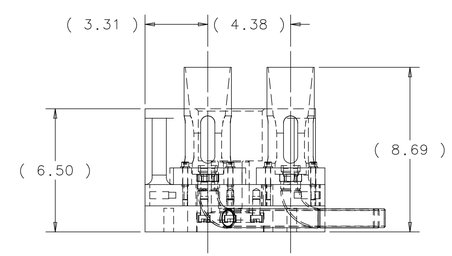

	ITEM	PART NO.	DESCRIPTION OR SIZE	QTY.
B	9	MC-433814	U.S. REMOTE CONN HELIUM - WELDED	1
A	~~8~~		~~ø.250 DOWEL PIN 2.00" LG., 316 SS~~	~~6~~
	7	SCHNORR S 6.35 SS	1/4" SERRATED SAFETY WASHER, SS	12
A	6		SHCS 1/4-20 UNC X 1.75" LG., TITANIUM	12
	5	MCMASTER-CARR P/N 92185A616 OR EQ.	SHCS 3/8-16 UNC X .875" LG., 316 SS	4
A	4	MD-433635	UPSTREAM HANGER SUPPORT PLATE	1
B	3	MC-433562	U.S. REMOTE CONN RETURN - WELDED	1
B	2	MC-433560	U.S. REMOTE CONN SUPPLY - WELDED	1
	1	MB-427798	DRAW BAR NUT - UPSTREAM	1

PARTS LIST

UNLESS OTHERWISE SPECIFIED			ORIGINATOR	M.MCGEE	11-MAR-2010
.XX	.XXX	ANGLES	DRAWN	D.HURD	24-SEP-2010
± .03	± .005	± 1°	CHECKED	M.MCGEE	14-OCT-2010
			APPROVED	M.MARTENS	15-OCT-2010

1. BREAK ALL SHARP EDGES .015 MAX.
2. DO NOT SCALE DRAWING.
3. DIMENSIONS BASED UPON ASME Y14.5M-1994
4. MAX. ALL MACH. SURFACES 125
5. DRAWING UNITS: U.S. INCH

USED ON: MD-433565

MATERIAL: SEE PARTS LIST

FERMI NATIONAL ACCELERATOR LABORATORY
UNITED STATES DEPARTMENT OF ENERGY

NOVA-ANU TARGET HALL
MEDIUM ENERGY TARGET BAFFLE
UPSTREAM HANGER SUPPORT ASSEMBLY

SCALE	DRAWING NUMBER	SHEET	REV
1/4	8875.112-MD-433563	1 OF 1	B

CREATED WITH : Ideas12NXSeries GROUP: ACCELERATOR MECH. SUPPT.