REV	DESCRIPTION	DRAWN / APPROVED	DATE / DATE
A	ITEM 1 UPDATED, ITEM 2 CHANGED, AND ITEM 4 REMOVED	R.STEWART	08-FEB-2012
		M.MCGEE	30-MAR-2012
B	ITEM 2 UPDATED	R.STEWART	31-JUL-2012
		M.MCGEE	31-JUL-2012

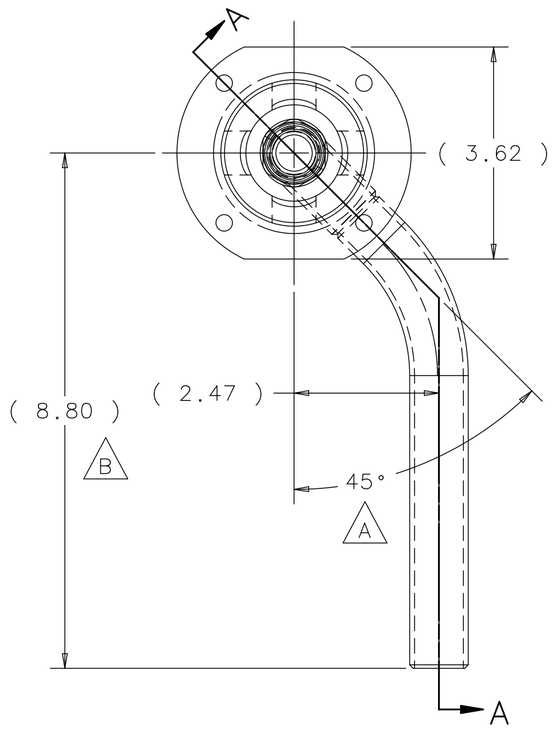

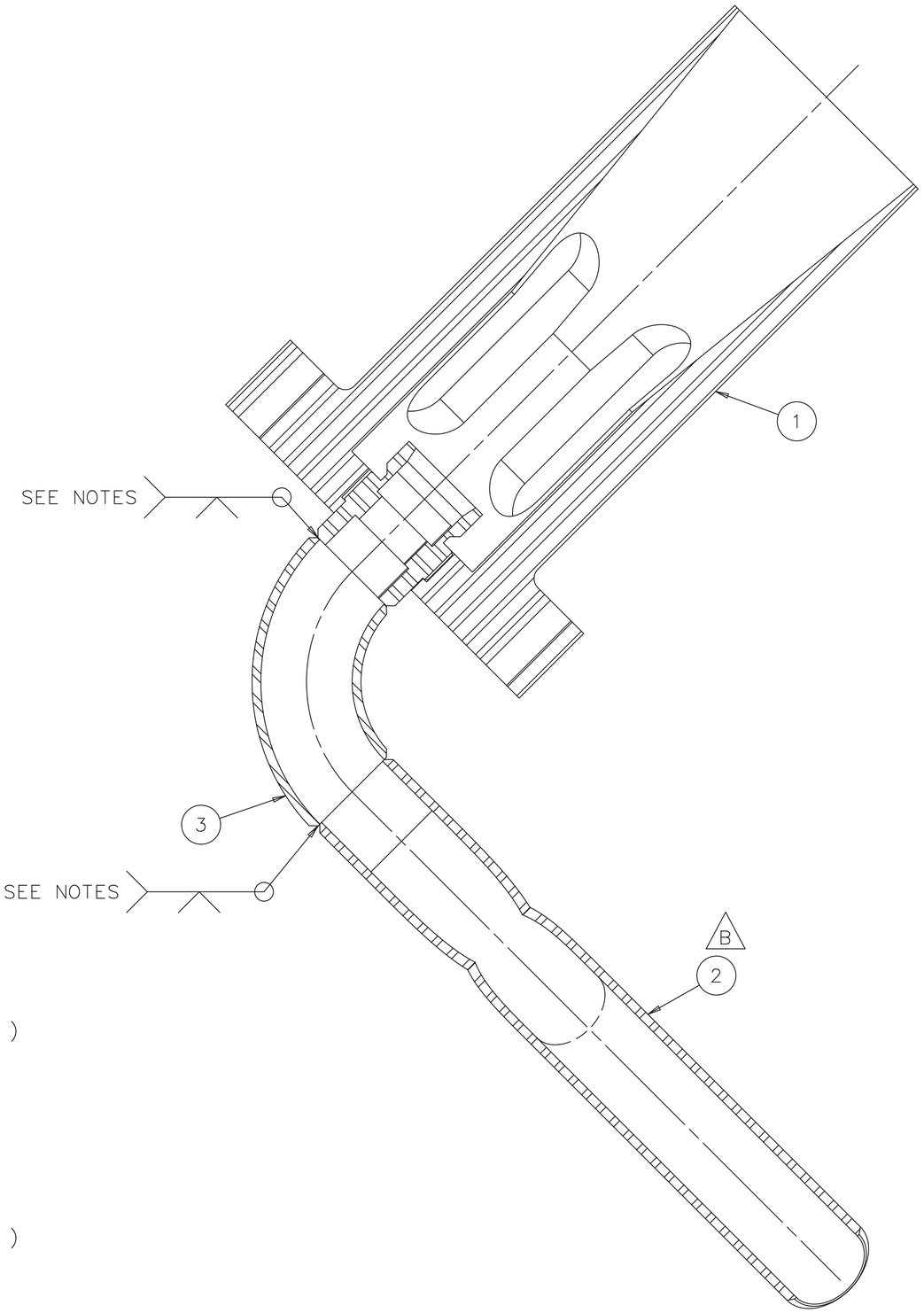

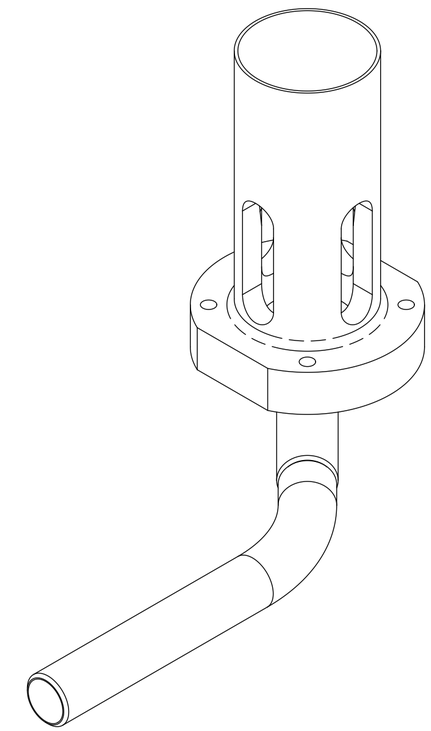

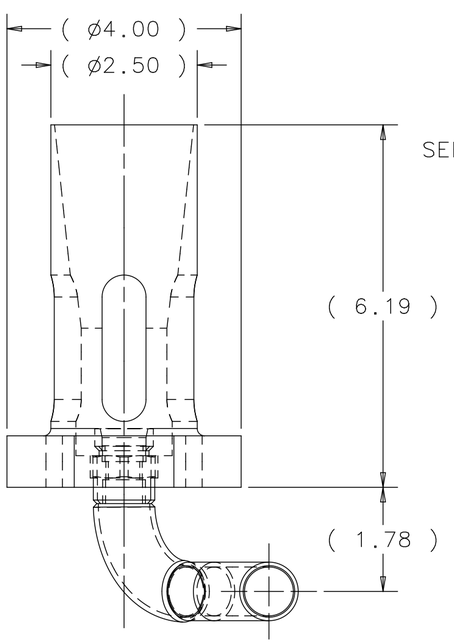

SECTION A-A
SCALE: FULL

ITEM	PART NO.	DESCRIPTION OR SIZE	QTY.
4	~~SWAGELOK SS-1210-1-12W~~	~~3/4" MALE PIPE WELD CONNECTOR~~	~~1~~
3		3/4" 90° LONG RADIUS BUTT WELD ELBOW 316 S.S. SCHEDULE 10	1
2	MB-433815	U.S. RETURN CONN. EXTENSION	1
1	MC-433559	U.S. REMOTE CONNECTOR - ASSEMBLY	1

PARTS LIST

UNLESS OTHERWISE SPECIFIED					
.XX	.XXX	ANGLES	ORIGINATOR	M.MCGEE	11-MAR-2010
± .03	± .005	± 1°	DRAWN	D.HURD	24-SEP-2010
			CHECKED	M.MCGEE	14-OCT-2010
			APPROVED	M.MARTENS	15-OCT-2010

1. BREAK ALL SHARP EDGES .015 MAX.
2. DO NOT SCALE DRAWING.
3. DIMENSIONS BASED UPON ASME Y14.5M-1994
4. MAX. ALL MACH. SURFACES 125
5. DRAWING UNITS: U.S. INCH

USED ON: MD-433563

MATERIAL: SEE PARTS LIST

FERMI NATIONAL ACCELERATOR LABORATORY
UNITED STATES DEPARTMENT OF ENERGY

NOVA-ANU TARGET HALL
MEDIUM ENERGY TARGET BAFFLE
U.S. REMOTE CONN RETURN - WELDED

SCALE	DRAWING NUMBER	SHEET	REV
1/2	8875.112-MC-433562	1 OF 1	B

CREATED WITH : Ideas12NXSeries | GROUP: ACCELERATOR MECH. SUPPT.

NOTES:

1. ALL WELDING TO BE DONE BY FERMILAB.
2. ALL WELDS TO BE LEAK TIGHT TO 100 PSI.