REV	DESCRIPTION	DRAWN	DATE
		APPROVED	DATE

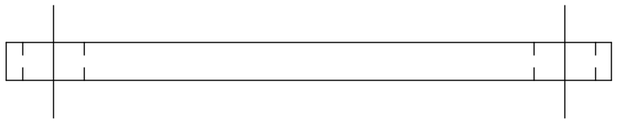

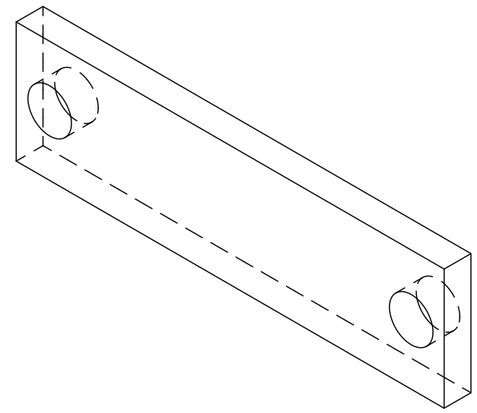

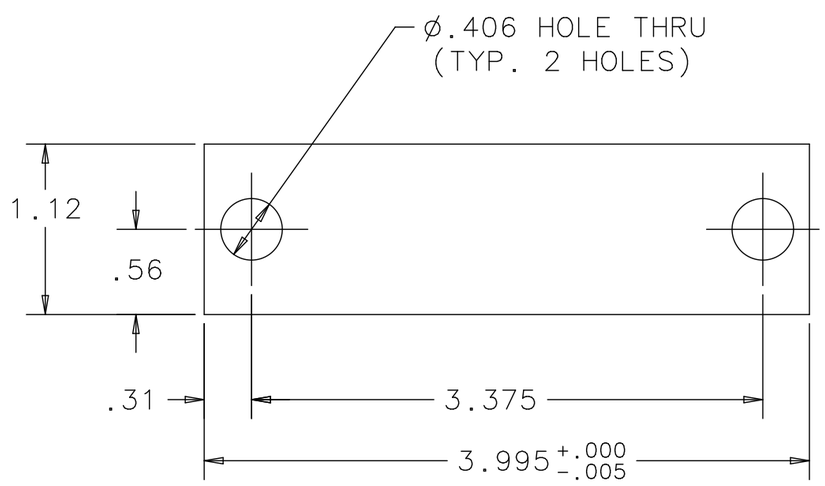

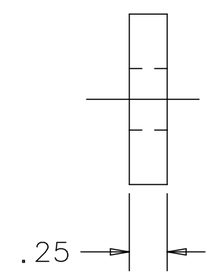

UNLESS OTHERWISE SPECIFIED			ORIGINATOR	K.ANDERSON	08-SEP-2005
.XX	.XXX	ANGLES	DRAWN	G.WAVER	08-SEP-2005
± .02	± .005	±1/2°	CHECKED	K.ANDERSON	01-NOV-2005
1. BREAK ALL SHARP EDGES .015 MAX. 2. DO NOT SCALE DRAWING. 3. DIMENSIONS BASED UPON ANSI Y14.5M-1982 4. MAX. ALL MACH. SURFACES 125 5. DRAWING UNITS: INCHES			APPROVED	K.ANDERSON	01-NOV-2005
			USED ON	MD-427799	
			MATERIAL	6061-T6 ALUMINUM	

FERMI NATIONAL ACCELERATOR LABORATORY
UNITED STATES DEPARTMENT OF ENERGY

NUMI TARGET HALL TARGET BAFFLE UPSTREAM HANGER SUPPORT SIDE COVER PLATE

SCALE	DRAWING NUMBER	SHEET	REV
FULL	8875.112-MB-433320	1 OF 1	

CREATED WITH : Ideas11NXSeries | GROUP: ACCELERATOR MECH. SUPPT.

Created: 14:59:12 on 21-02-13 (D-M-Y) By: rstewart State: 3-RELEASED