REV	DESCRIPTION	DRAWN	DATE
		APPROVED	DATE
A	ø1.1090/ø1.1230 WAS ø1.2590/ø1.2450 1 1/4 7 UNC WAS 1 5/16 UN MATL. WAS ø3 1/2 TYPE 304 STAINLESS STEEL	G SMITH	1/20/04
		E.M.V.	1/20/04
B	MAT'L WAS NAVEL BRONZE	G. WAVER	5/23/05
		K. ANDERSON	5/24/05
C	ADDED 1/8" DEEP GROOVE TO AID IN WIRING SCREWS AT ASSEMBLY.	DGH	16-SEP-2008
		V.SIDOROV	9-17-08

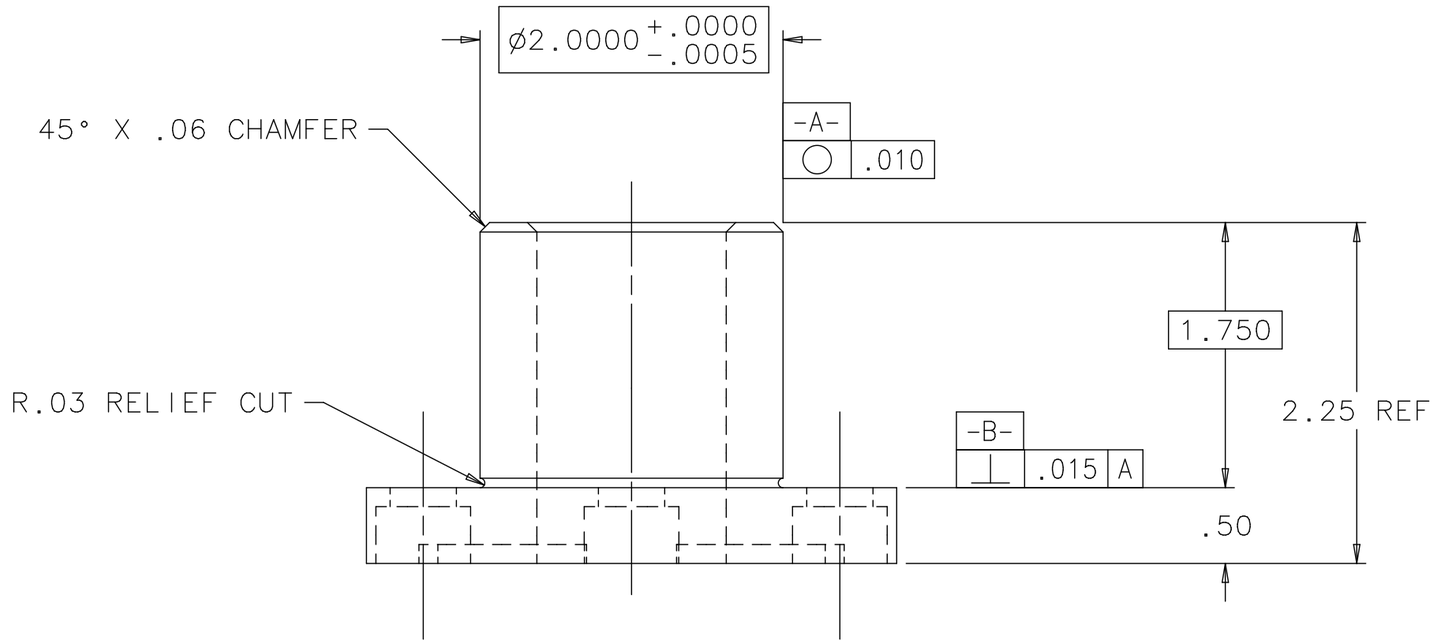

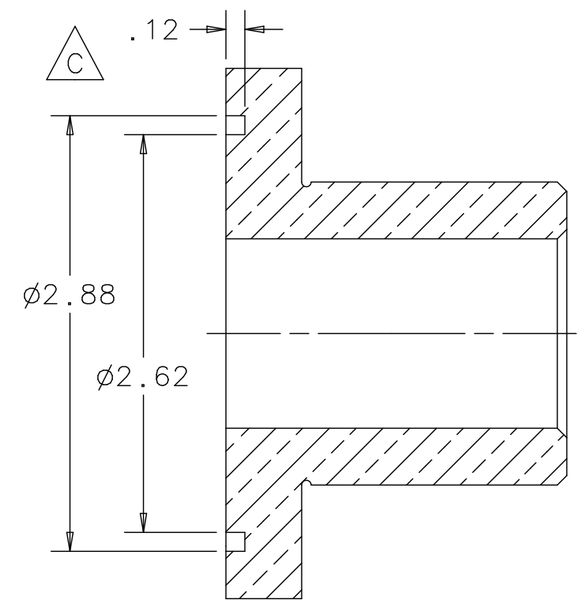

SECTION A-A

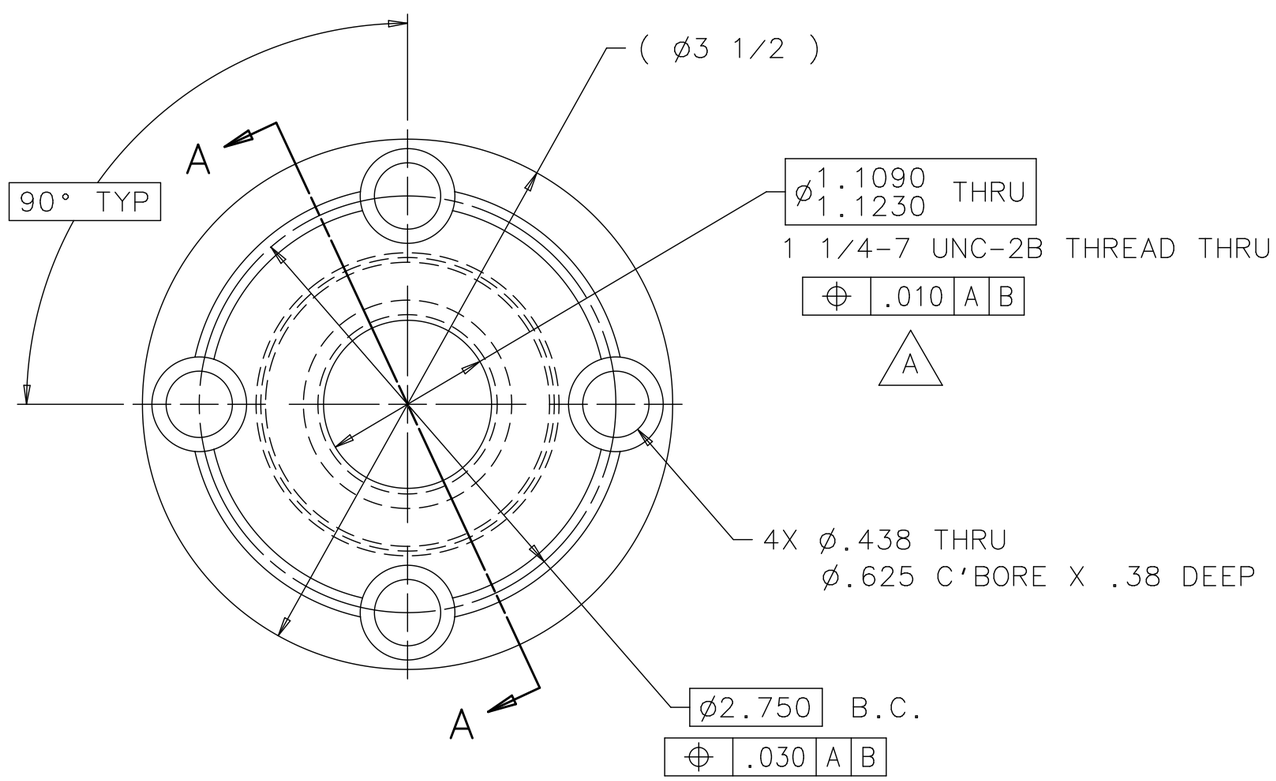

UNLESS OTHERWISE SPECIFIED			ORIGINATOR	E.VILLEGAS	03-FEB-2003
.XX	.XXX	ANGLES	DRAWN	N.GRINNELL	12-FEB-2003
± .03	± .005	± 1/2°	CHECKED	W.CYKO	11-JUN-2003
			APPROVED	E.VILLEGAS	11-JUN-2003

1. BREAK ALL SHARP EDGES .015 MAX.
2. DO NOT SCALE DRAWING.
3. DIMENSIONS BASED UPON ASME Y14.5M-1994
4. MAX. ALL MACH. SURFACES 125
5. DRAWING UNITS: U.S. INCH

USED ON: MD-427772

MATERIAL: NAVAL BRASS C464 UNLEADED (A) (B)

FERMI NATIONAL ACCELERATOR LABORATORY
UNITED STATES DEPARTMENT OF ENERGY

PPD/MECHANICAL DEPARTMENT
NUMI TARGET HALL TARGET BAFFLE
DRAW BAR NUT - DOWNSTREAM

SCALE	DRAWING NUMBER	SHEET	REV
1:1	8875.112-MB-427774	1 OF 1	C

CREATED WITH : Ideas12NXSeries | GROUP: ACCELERATOR MECH. SUPPT.