| REV | DESCRIPTION | DRAWN | DATE |
|---|---|---|---|
| | | APPROVED | DATE |
| A | CHANGED FROM WELDMENT TO SOLID PIECE, ADDED FILLET CHANGED 1/2" HOLE TO .501 HOLE | S. OPLT | 3/31/05 |
| | | K. ANDERSON | 13-APR-2005 |

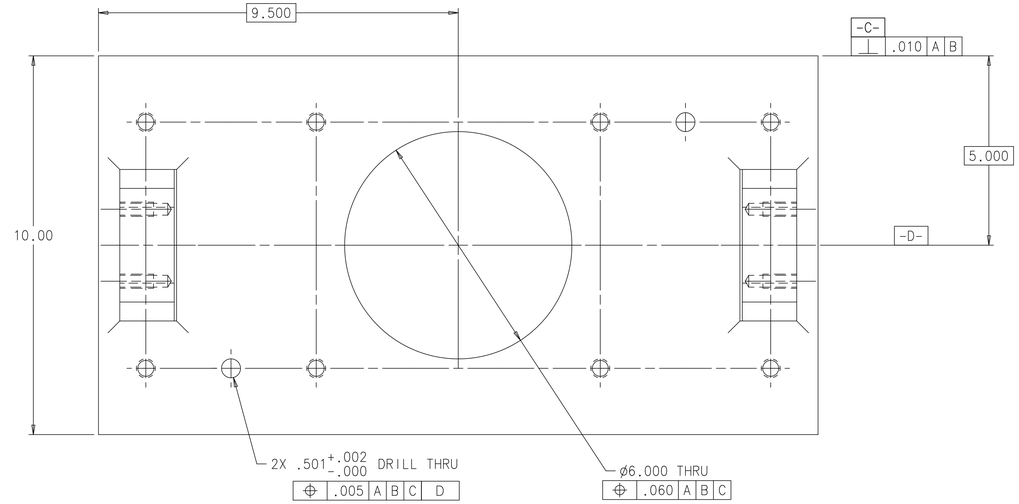


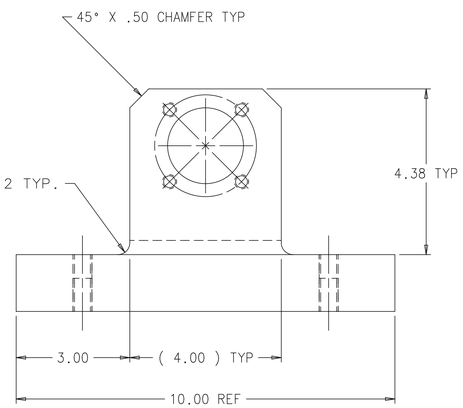


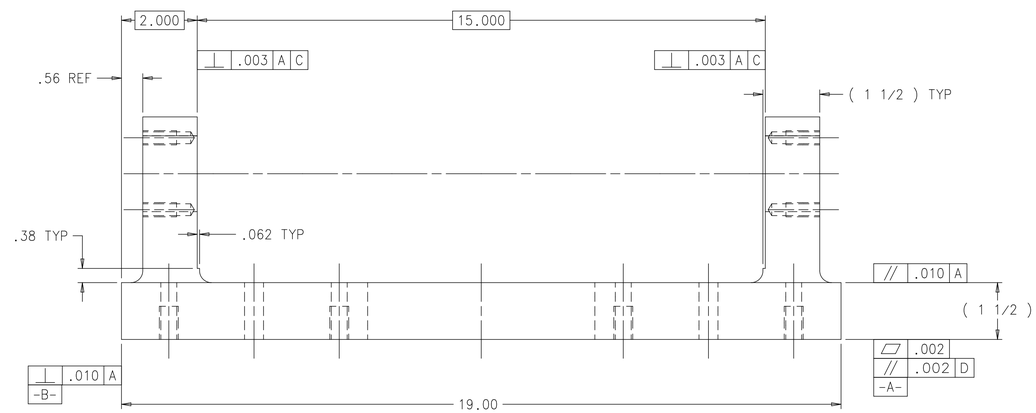


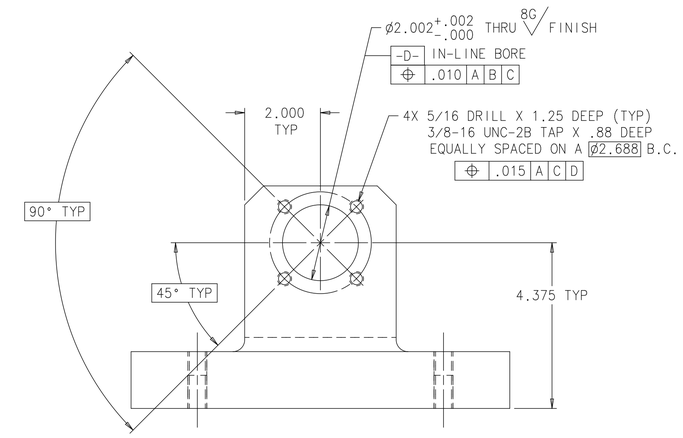


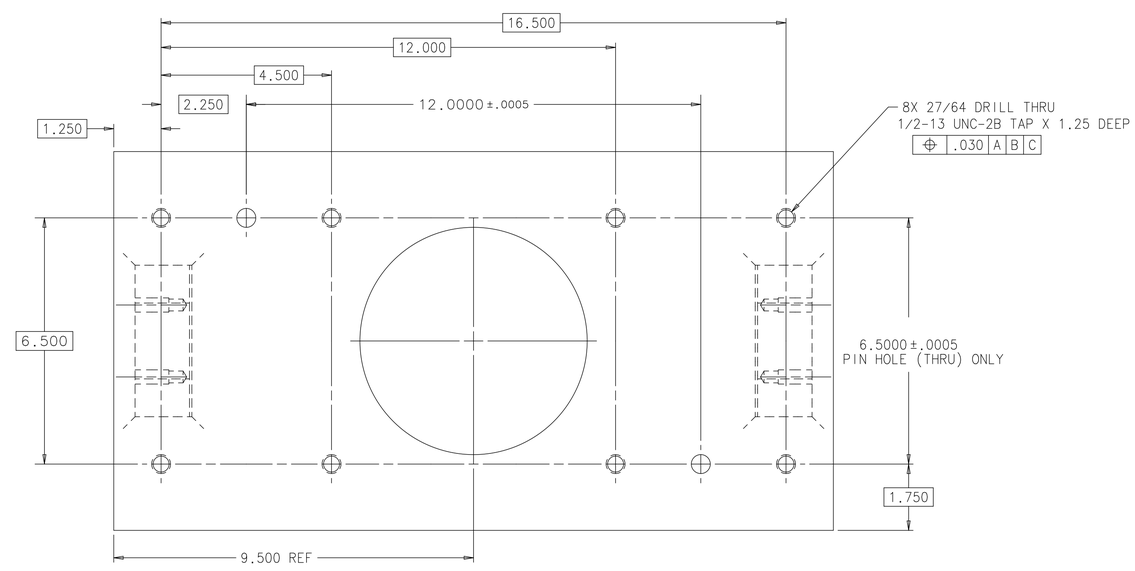


NOTE: APPROXIMATE WEIGHT = 80 LBS.

| UNLESS OTHERWISE SPECIFIED | | | ORIGINATOR | E.VILLEGAS | 03-FEB-2003 |
|---|---|---|---|---|---|
| .XX | .XXX | ANGLES | DRAWN | N.GRINNELL | 14-MAR-2003 |
| ± .03 | ± .005 | ± .5° | CHECKED | W.CYKO | 11-JUN-2003 |
| 1. BREAK ALL SHARP EDGES .015 MAX. 2. DO NOT SCALE DRAWING. 3. DIMENSIONS BASED UPON ANSI Y14.5M-1982 4. ALL DIMENSIONS ARE INCHES 5. MAX. ALL MACH. SURFACES 125 | | | APPROVED | E.VILLEGAS | 11-JUN-2003 |
| | | | USED ON | MD-427772 | |
| | | | MATERIAL | 6061-T6 ALUMINUM | |

FERMI NATIONAL ACCELERATOR LABORATORY
UNITED STATES DEPARTMENT OF ENERGY

PPD/MECHANICAL DEPARTMENT
NUMI, TARGET HALL, TARGET BAFFLE
PIVOT BLOCK -DS

| SCALE | DRAWING NUMBER | SHEET | REV |
|---|---|---|---|
| 1:2 | 8875.112-MD-427771 | 1 OF 1 | A |

CREATED WITH : Ideas11NXSeries | GROUP: ACCELERATOR MECH. SUPPT.