REV	DESCRIPTION	DRAWN	DATE
		APPROVED	DATE
A	ADDED 45° DIMENSION. REMOVED 3/8-16 TAPPED HOLES.	B. CYKO	09-18-02
		R.SILVA	18-SEP-2002
B	MATERIAL WAS CARBON STEEL	G. WAVER	4/10/06
		K. ANDERSON	5/25/06
C	ADDED MD-427772 TO USED ON.	DGH	07-FEB-2008
		V.SIDOROV	02/25/08

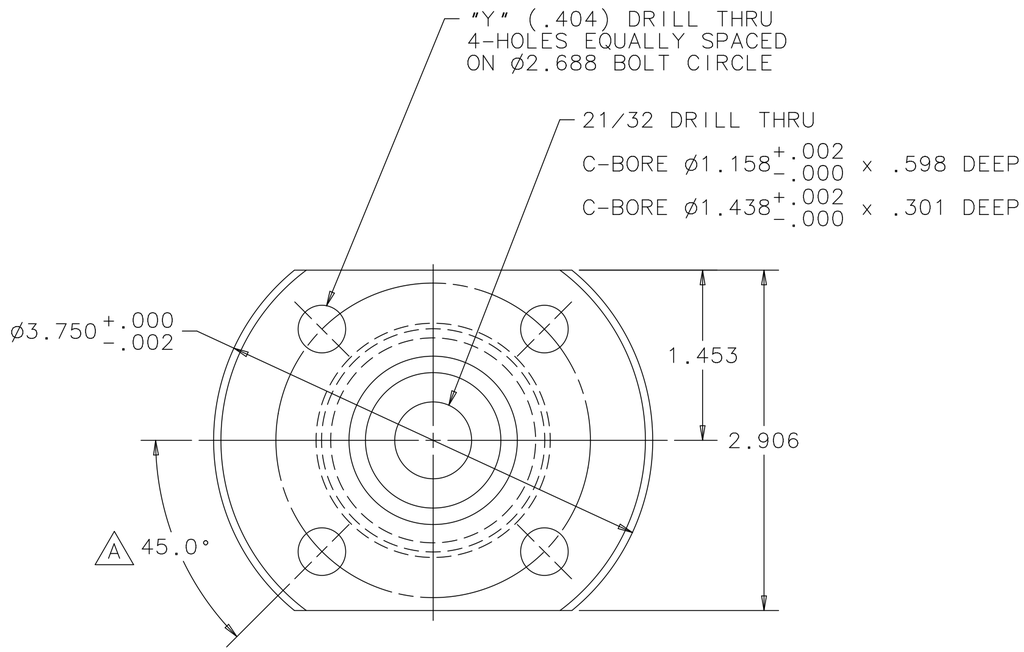

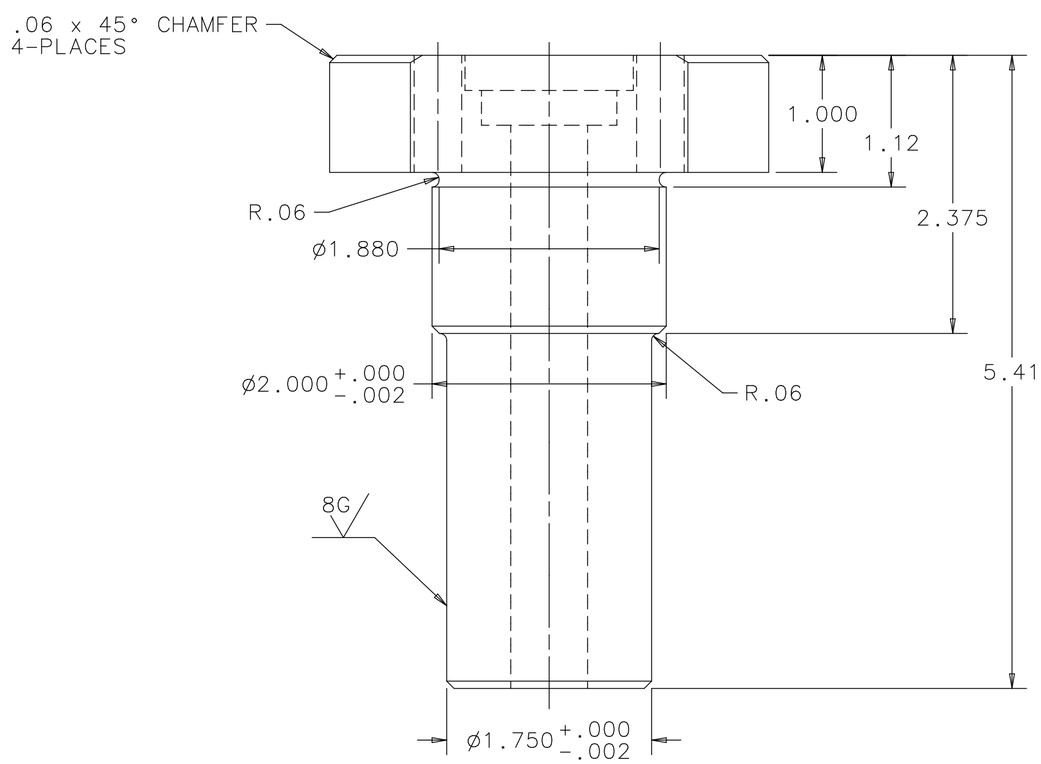

UNLESS OTHERWISE SPECIFIED			ORIGINATOR	R.SILVA	13-APR-2001
.XX	.XXX	ANGLES	DRAWN	W.CYKO	13-APR-2001
± .01	± .005	± 1/2°	CHECKED	C.NILA	09-JUL-2001
			APPROVED	R.SILVA	09-JUL-2001

1. BREAK ALL SHARP EDGES MAX.
2. DO NOT SCALE DRAWING.
3. DIMENSIONS BASED UPON ASME Y14.5M-1994
4. MAX. ALL MACH. SURFACES 125
5. DRAWING UNITS: U.S. INCH

USED ON: MD-406110, MD-427772 (C)

MATERIAL: 304-SST

FERMI NATIONAL ACCELERATOR LABORATORY
UNITED STATES DEPARTMENT OF ENERGY

PPD/MECHANICAL DEPT.
HORN1 ASSY.
PIVOT SHAFT, MODULE ASSY.

SCALE	DRAWING NUMBER	SHEET	REV
FULL	8875.111-MC-406081	1 OF 1	C

CREATED WITH : Ideas12NXSeries | GROUP: ACCELERATOR MECH. SUPPT.