REV	DESCRIPTION	DRAWN / APPROVED	DATE / DATE
A	REDESIGNED PART; UPDATED USED ON AND TITLE	G. WAVER	3/15/04
		K. ANDERSON	6/28/05
B	ADDED R.12 TO 4 CORNERS	G. WAVER	7/12/06
		K. ANDERSON	11/6/06
C	ADDED MD-427772 TO USED ON.	DGH	07-FEB-2008
		V.SIDOROV	02/25/08

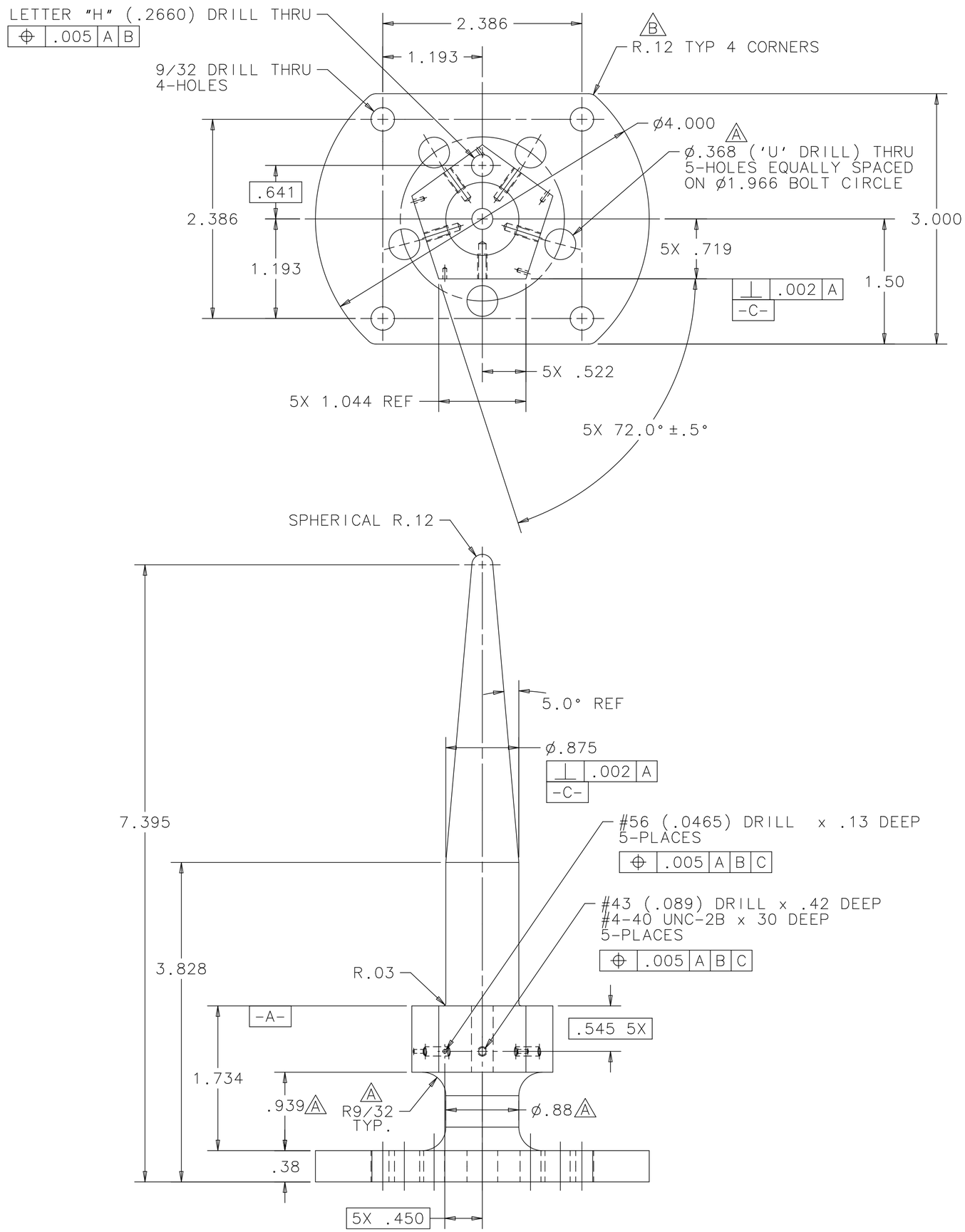

UNLESS OTHERWISE SPECIFIED					
.XX	.XXX	ANGLES	ORIGINATOR	R.SILVA	06-APR-2001
± .01	± .005	± 1/2°	DRAWN	W.CYKO	06-APR-2001
			CHECKED	CNILA	10-JUL-2002
			APPROVED	R.SILVA	10-JUL-2002

1. BREAK ALL SHARP EDGES .015 MAX.
2. DO NOT SCALE DRAWING.
3. DIMENSIONS BASED UPON ASME Y14.5M-1994
4. MAX. ALL MACH. SURFACES 125
5. DRAWING UNITS: U.S.INCH

USED ON A MD-406110 MD-406111 MD-427744 MD-427747 MD-427772 C

MATERIAL 304-SST

FERMI NATIONAL ACCELERATOR LABORATORY
UNITED STATES DEPARTMENT OF ENERGY

PPD/MECHANICAL DEPT.
A HORN1 AND HORN2 MODULE ASSY.
ELECTRICAL CONNECTOR MOUNT

SCALE	DRAWING NUMBER	SHEET	REV
FULL	8875.111-MC-406062	1 OF 1	C

CREATED WITH : Ideas12NXSeries GROUP: ACCELERATOR MECH. SUPPT.