REV	DESCRIPTION	DRAWN	DATE
		APPROVED	DATE
A	2.844 DIMENSION WAS 3.375, HOLE DEPTH WAS CHANGED FROM .50 TO .62, FEATURE CONTROL ADDED	R.STEWART	02-DEC-2010
		M.MCGEE	06-DEC-2010
B	REMOVE C'BORE		RJun 2012

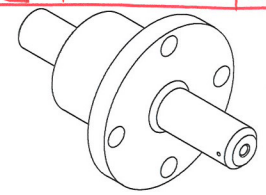

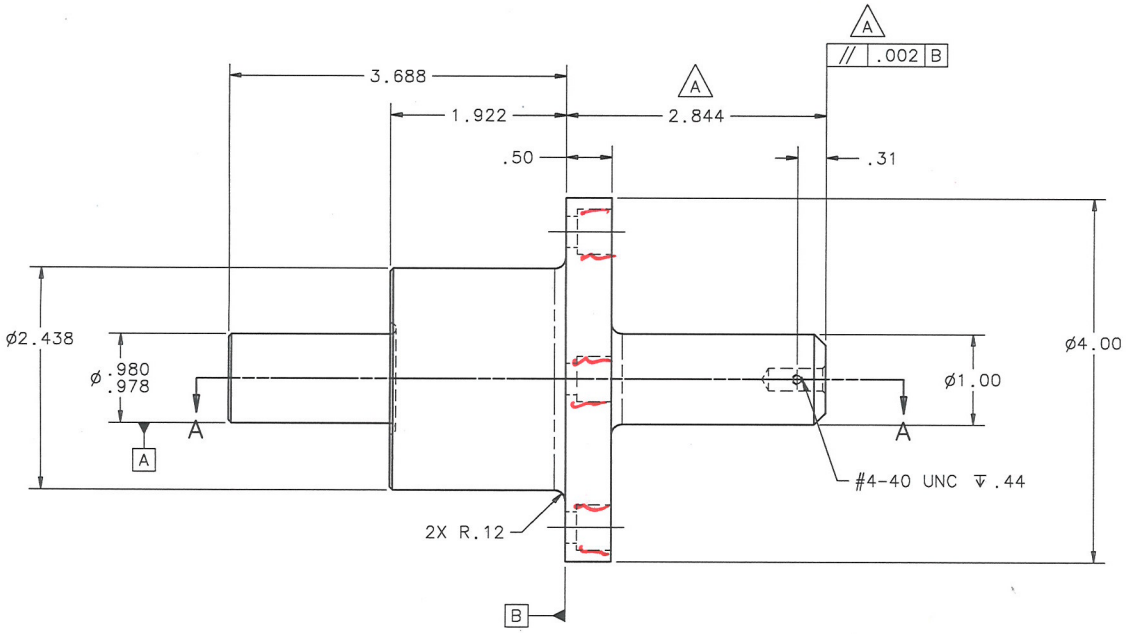

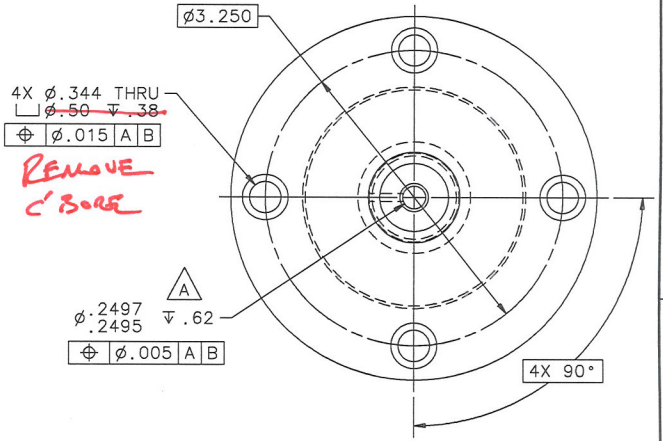

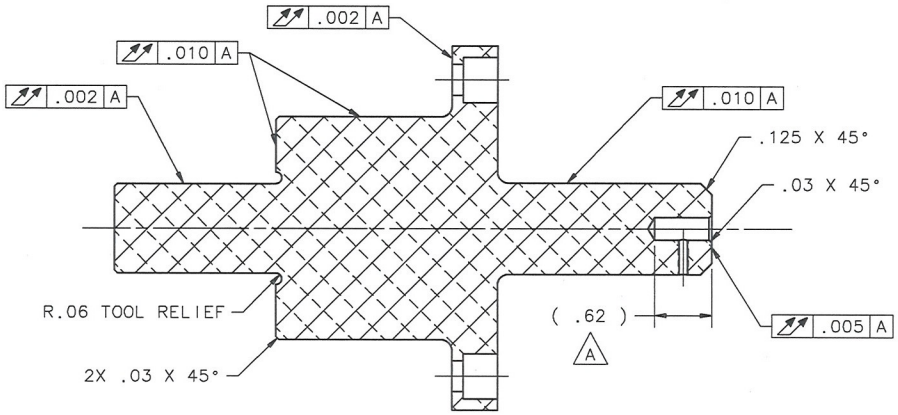

UNLESS OTHERWISE SPECIFIED			ORIGINATOR	M.MCGEE	11-MAR-2010
.XX	.XXX	ANGLES	DRAWN	D.HURD	22-SEP-2010
± .03	± .005	± 1°	CHECKED	M.MCGEE	14-OCT-2010
1. BREAK ALL SHARP EDGES .015 MAX. 2. DO NOT SCALE DRAWING. 3. DIMENSIONS BASED UPON ASME Y14.5M-1994 4. MAX. ALL MACH. SURFACES 125 5. DRAWING UNITS: U.S. INCH			APPROVED	M.MARTENS	15-OCT-2010
			USED ON	MD-433565 MD-433577	
			MATERIAL	6061-T6511 ALUMINUM ø4.00 COLD FINISHED ROUND	

FERMI NATIONAL ACCELERATOR LABORATORY
UNITED STATES DEPARTMENT OF ENERGY

NOVA-ANU TARGET HALL
MEDIUM ENERGY TARGET BAFFLE
FRAME HANGER PIVOT STUD

SCALE	DRAWING NUMBER	SHEET	REV
FULL	8875.112-MC-433578	1 OF 1	~~A~~ B

CREATED WITH : Ideas12NXSeries | GROUP: ACCELERATOR MECH. SUPPT.

Created: 14:20:07 on 28-12-11 (D-M-Y) By: rstewart State: 3-RELEASED