REV	DESCRIPTION	DRAWN	DATE
		APPROVED	DATE
A	ITEM 13 REMOVED	R.STEWART	17-AUG-2012
		M.MCGEE	17-AUG-2012

B CHANGED ITEM
#5 ~~2.00 lg~~
2.50 lg unf
2.00

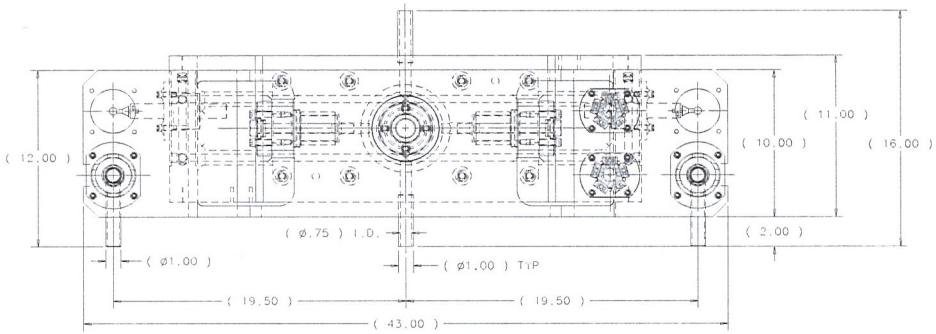

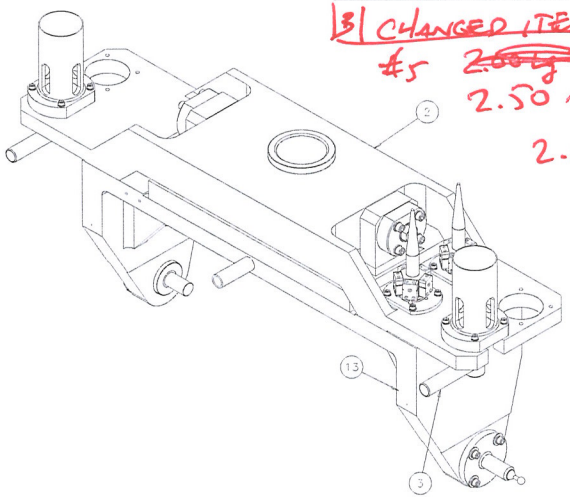

2.5"

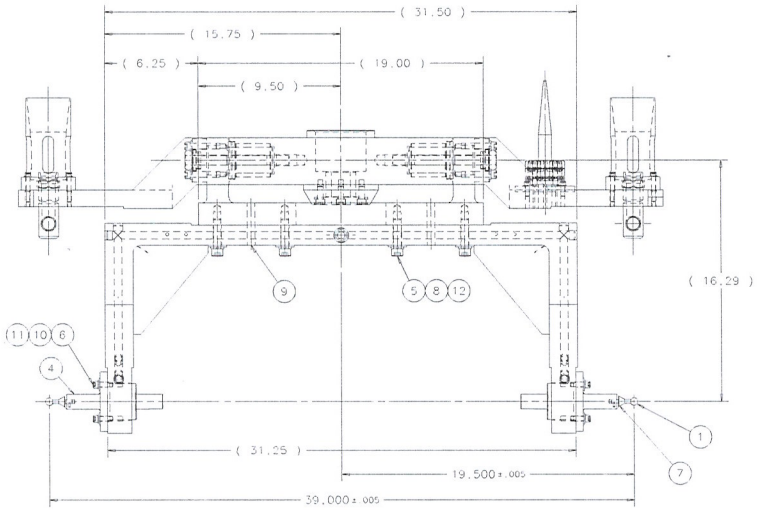

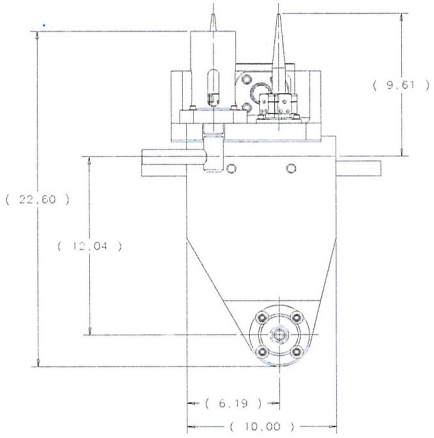

ITEM	PART NO.	DESCRIPTION OR SIZE	QTY.
13	SWAGELOK	TUBE FITTING, MALE CONNECTOR 1/8 X 1/8" WELD 316L PART NO. SS-1610-1-1-16W	1
12	MCMASTER-CARR PN 91950A033 OR EQ	1/2" FLAT WASHER, 316 SS	8
11	MCMASTER-CARR PN 91950A030 OR EQ	5/16" FLAT WASHER, 316 SS	8
10	SCHNORR S 8 SS	5/16" SERRATED SAFETY WASHER, SS	8
9	MCMASTER-CARR PN 90145A720 OR EQ	DOWEL PIN 1/2" X 2.00" LG., SS	2
8	SCHNORR S 12.7 SS	1/2" SERRATED SAFETY WASHER, SS	8
7	MCMASTER-CARR PN 92313A106 OR EQ	SET SCREW #4-40 UNC X .25" LG., 316 SS	2
6	MCMASTER-CARR PN 92185A205 OR EQ	SHCS 5/16-18 UNC X 1.25" LG., 316 SS	8
5	MCMASTER-CARR PN 92185A720 OR EQ	SHCS 1/2-13 UNC X ~~2.00~~ LG., 316 SS	8
4	ME-433578	FRAME HANGER PIVOT STUD	2
3	MD-433576	D.S. FRAME HANGER - FINAL MACHINE	1
2	MD-433571	DOWNSTREAM PIVOT ASSEMBLY	1
1	MB-433656	FRAME HANGER TOOLING BALL	2

PARTS LIST

UNLESS OTHERWISE SPECIFIED			ORIGINATOR	M.MCGEE	11-MAR-2010
.XX	.XXX	ANGLES	DRAWN	D.HURD	24-SEP-2010
± .03	± .005	± 1°	CHECKED	M.MCGEE	07-JUN-2012
			APPROVED	M.MCGEE	07-JUN-2012

1. BREAK ALL SHARP EDGES .015 MAX.
2. DO NOT SCALE DRAWING.
3. DIMENSIONS BASED UPON ASME Y14.5M-1994
4. MAX. ALL MACH. SURFACES 125
5. DRAWING UNITS: U.S. INCH

USED ON: ME-433843

MATERIAL: SEE PARTS LIST

FERMI NATIONAL ACCELERATOR LABORATORY
UNITED STATES DEPARTMENT OF ENERGY

NOVA-ANU TARGET HALL
MEDIUM ENERGY TARGET
DOWNSTREAM FRAME HANGER ASSEMBLY

SCALE	DRAWING NUMBER	SHEET	REV
1/4	8875.000-MD-433577	1 OF 1	B

CREATED WITH: Ideas12NXSeries GROUP: ACCELERATOR MECH. SUP

Created: 14:41 08 on 22-08-12 (D-M-Y) By: rstewart State: 3-RELEASED