REV	DESCRIPTION	DRAWN	DATE
		APPROVED	DATE
A	NOTE CHANGED	R.STEWART	20-MAY-2013
		M.MCGEE	20-MAY-2013

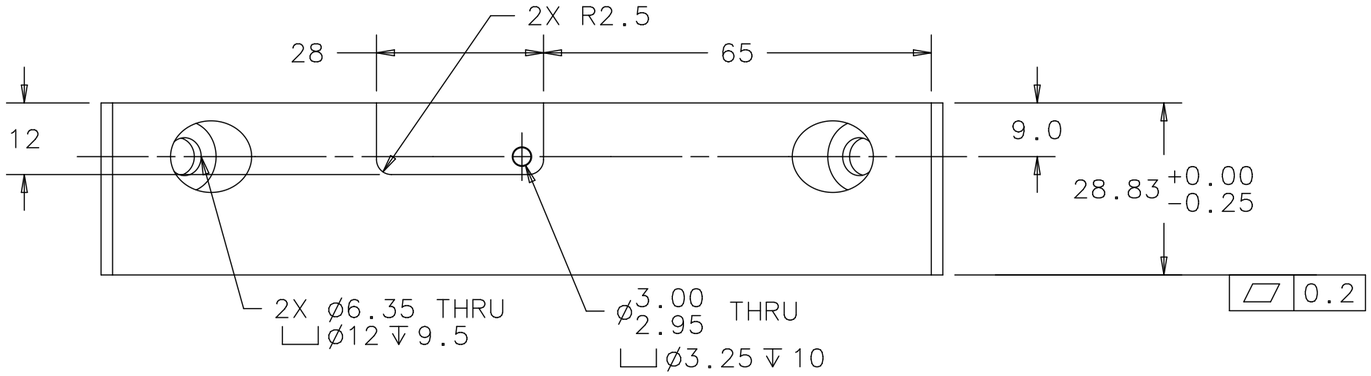

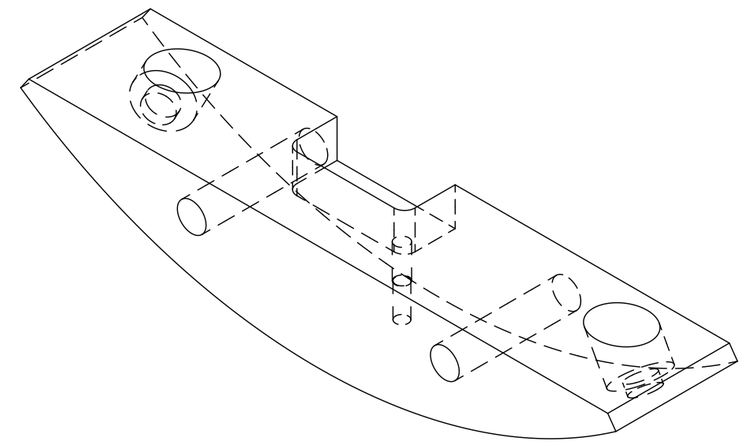

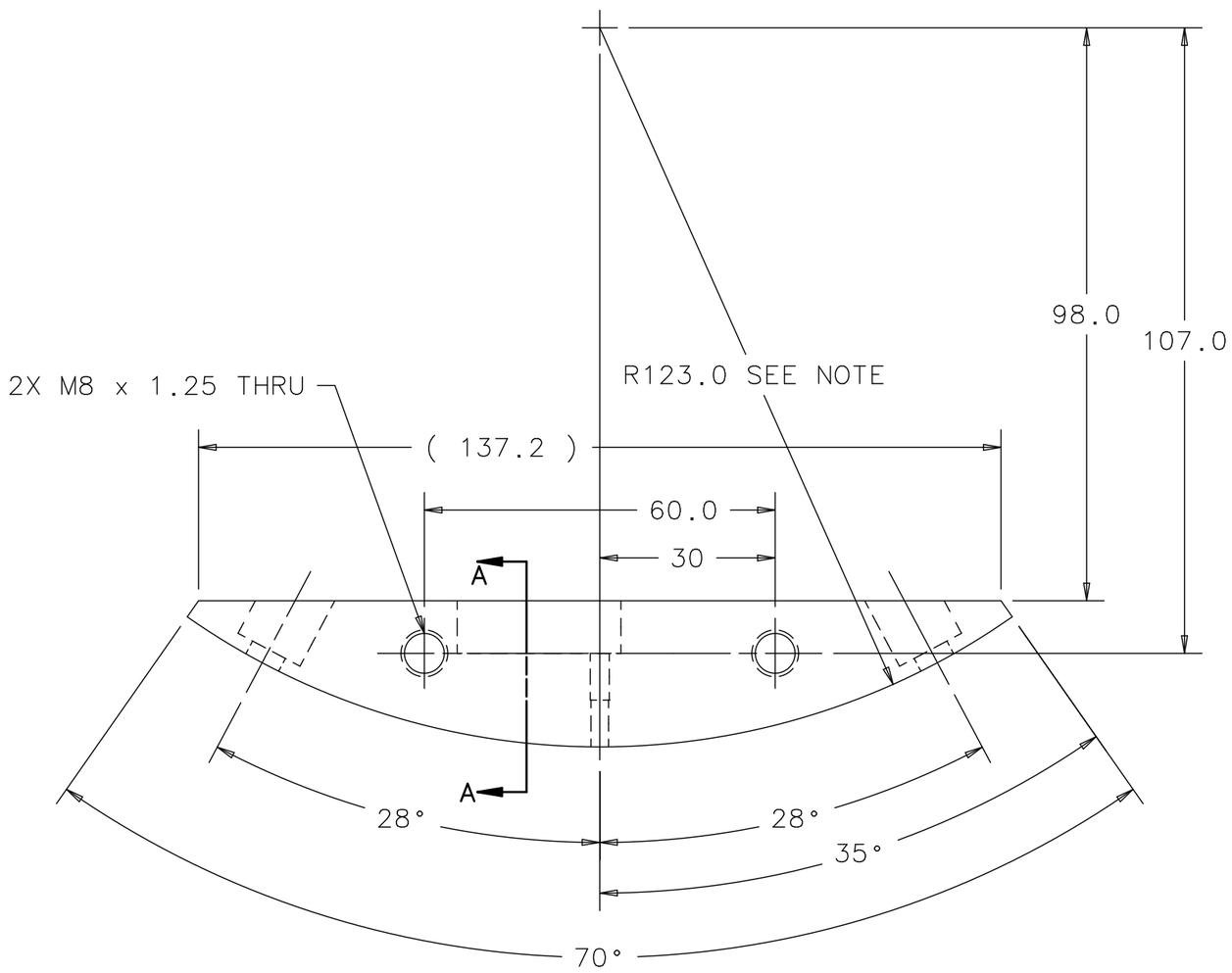

A

NOTE: RADIUS TO BE MACHINED WITH ID OF INNER TUBE (ME 433920)

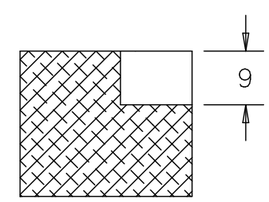

SECTION A-A
SCALE 1:1

UNLESS OTHERWISE SPECIFIED			ORIGINATOR	M.MCGEE	16-MAY-2013
METRIC	X.X	ANGLES	DRAWN	R.STEWART	16-MAY-2013
± 0.2	± 0.1	± .25°	CHECKED	M.MCGEE	16-MAY-2013
			APPROVED	M.MCGEE	16-MAY-2013
			USED ON	ME-433923	
			MATERIAL	6061-T651 ALUMINUM	

1. BREAK ALL SHARP EDGES 0.4 MAX.
2. DO NOT SCALE DRAWING.
3. DIMENSIONS BASED UPON ASME Y14.5M-1994
4. MAX. ALL MACH. SURFACES 1.6
5. DRAWING UNITS: METRIC

FERMI NATIONAL ACCELERATOR LABORATORY
UNITED STATES DEPARTMENT OF ENERGY

NOVA-ANU TARGET HALL MEDIUM ENERGY TARGET MARK II CASING RAIL MOUNT DS

SCALE	DRAWING NUMBER	SHEET	REV
1:1	8875.112-MB-433946	1 OF 1	A

CREATED WITH : Ideas12NXSeries GROUP: ACCELERATOR MECH. SUPPT.

Created: 14:30:15 on 20-05-13 (D-M-Y) By: rstewart State: 3-RELEASED