REV	DESCRIPTION	DRAWN	DATE
		APPROVED	DATE
A	DIMENSION ADDED	R.STEWART	07-FEB-2013
		M.MCGEE	07-FEB-2013

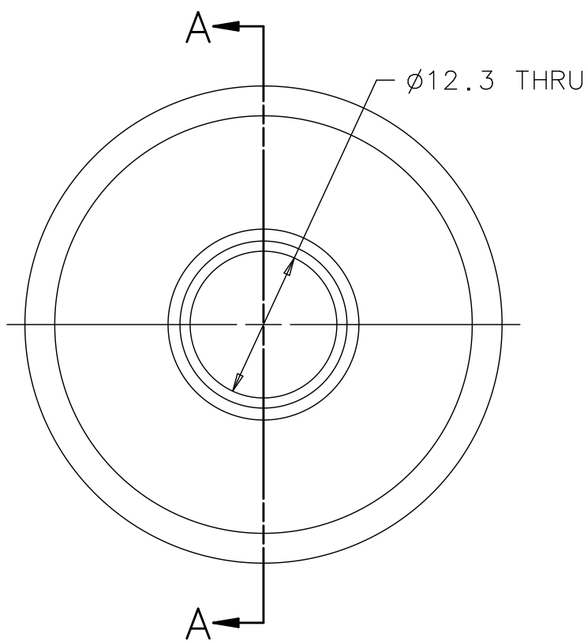

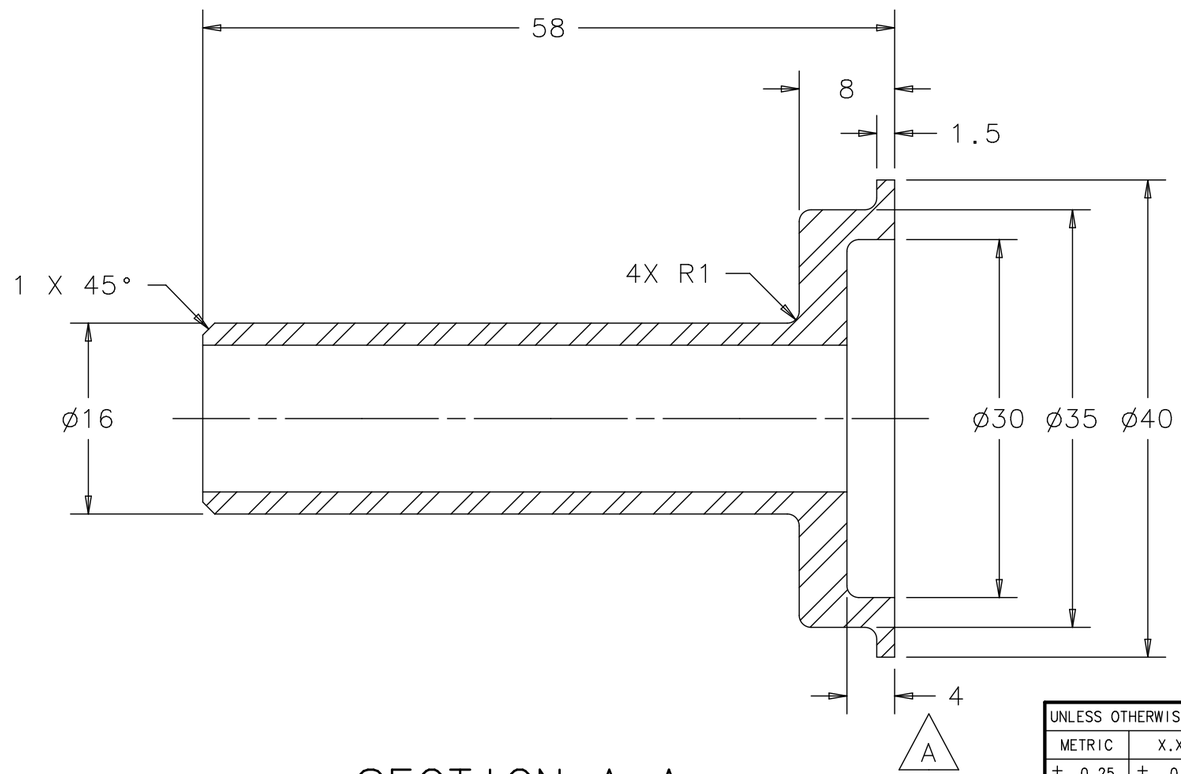

SECTION A-A
SCALE 2:1

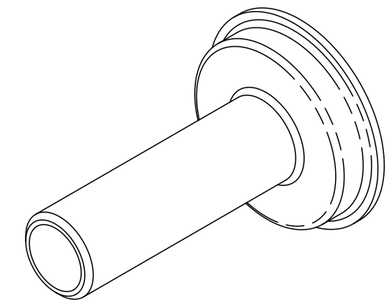

UNLESS OTHERWISE SPECIFIED			ORIGINATOR	M.MCGEE	22-JAN-2013
METRIC	X.X	ANGLES	DRAWN	R.STEWART	22-JAN-2013
± 0.25	± 0.1	± .5°	CHECKED	M.MCGEE	22-JAN-2013
			APPROVED	M.MCGEE	22-JAN-2013

1. BREAK ALL SHARP EDGES 0.4 MAX.
2. DO NOT SCALE DRAWING.
3. DIMENSIONS BASED UPON ASME Y14.5M-1994
4. MAX. ALL MACH. SURFACES 1.8
5. DRAWING UNITS: METRIC

USED ON: ME-433886

MATERIAL: 316L STAINLESS STEEL

FERMI NATIONAL ACCELERATOR LABORATORY
UNITED STATES DEPARTMENT OF ENERGY

NOVA-ANU TARGET HALL
MEDIUM ENERGY TARGET MARK II
WATER FLANGE

SCALE	DRAWING NUMBER	SHEET	REV
2:1	8875.000-MB-433937	1 OF 1	A

CREATED WITH : Ideas12NXSeries | GROUP: ACCELERATOR MECH. SUPPT.

Created: 14:26:14 on 08-02-13 (D-M-Y) By: rstewart State: 3-RELEASED